R

Range Rover Sport

OWNER'S HANDBOOK

Publication Part No. LRL 10 02 62 141

Introduction

ABOUT THIS HANDBOOK

Please take the time to study all of the owner/operator literature supplied with your vehicle as soon as possible.

IMPORTANT

The information contained in this handbook covers all vehicle derivatives and optional equipment, some of which may not be fitted to your vehicle. Due to printing cycles, this handbook may include descriptions of options before they become generally available.

The vehicle options, hardware and software, are designed for the market in which the vehicle is intended for original sale. If the vehicle is to be registered or used in another geographical area, it may need modifications to suit local requirements. Land Rover is not responsible for the cost of any modifications. Warranty conditions may be affected.

The information contained in this publication was correct when it went to print. Subsequent vehicle design changes may result in a supplement being added to the literature pack. Updates can also be viewed on the Land Rover internet site at; **www.ownerinfo.landrover.com**.

In the interest of development, the right is reserved to change specifications, design or equipment at any time without notice and without incurring any obligations. This publication, or part thereof, may not be reproduced nor translated without our approval. Errors and omissions excepted.

SYMBOLS USED IN THIS HANDBOOK

Safety warnings indicate either a procedure which must be followed precisely, or information that should be considered with great care, in order to avoid the possibility of personal injury.

Cautions indicate either a procedure which must be followed precisely, or information that should be considered with great care, in order to avoid the possibility of damage to your vehicle.

This recycling symbol identifies those items that must be disposed of safely in order to prevent unnecessary damage to the environment.

This symbol identifies those items that must be disposed of correctly, as they contain harmful substances. Seek advice on disposal from your Land Rover Dealer/Authorised Repairer and/or your local authority.

This symbol identifies those features that can be adjusted, disabled or enabled by your Dealer/Authorised Repairer.

R

Contents

UNLOCKING THE VEHICLE

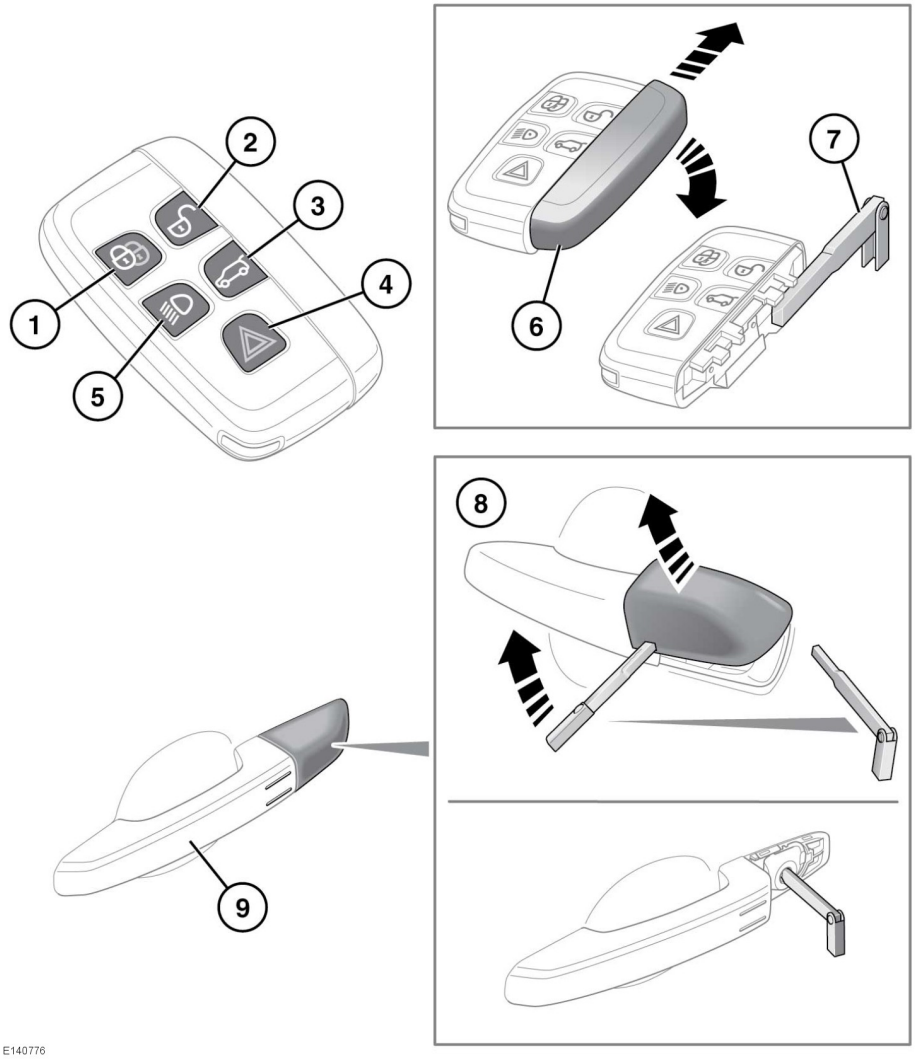

Entering the vehicle

Any person fitted with an implanted medical device should make sure that the device is kept at a distance of at least 22 cm (8.7 inches) away from any transmitter mounted in the vehicle. This is to avoid any possibility of interference between the system and the device.

Interference may cause the implanted medical device to malfunction, causing serious injury or death. For more information on the locations of the security system transmitters, see 265, REMOTE KEY FOB TRANSMITTER LOCATIONS.

To prevent accidental or unauthorised operation, never leave the Smart key unattended in the vehicle. Never leave children or animals unattended in the vehicle. The vehicle can be operated when the Smart key is inside the vehicle.

Note: *The operational range of the Smart key will vary considerably depending on atmospheric conditions and interference from other transmitting devices.*

Note: *If any door or the tailgate is locked or unlocked 10 times within a short period, the latch is disabled for approximately 1 minute.*

The vehicle is supplied with 2 Smart keys. The Smart keys act as remote controls for the locking and alarm system and allow the vehicle to be locked, unlocked and driven without the use of a conventional key. See **8, KEYLESS ENTRY**, **14, KEYLESS LOCKING** and **97, STARTING THE ENGINE**. Each Smart key also has an emergency key housed in a slide out compartment.

1. Lock:
   - Press to secure the vehicle. The vehicle can be Single or Double locked. See **13, SINGLE LOCKING** and **13, DOUBLE LOCKING**.

     Also see, **14, GLOBAL CLOSING**.
2. Unlock:
   - Press briefly to unlock the vehicle and deactivate the alarm. The hazard warning lamps will flash twice to indicate that the vehicle is unlocked and the alarm has been deactivated. The exterior lamps, interior lamps and approach lamps will illuminate to assist entry to the vehicle. Also see **8, GLOBAL OPENING**.
3. Tailgate release/stop/reverse direction/close:
   - Press briefly to open/close the tailgate. If the vehicle is locked and armed, the perimeter alarm will remain active while the tailgate is open, but intrusion and inclination sensing systems will be disabled for the duration that the tailgate is open.

     When closing the tailgate, if the vehicle is already locked and armed, the hazard warning lamps will flash after a few seconds to confirm the full alarm system has been reactivated. There will also be an audible sound if the vehicle was double locked. See **9, OPENING AND CLOSING THE TAILGATE**.

     Note: *Make sure that the Smart key does not remain in the vehicle before closing. If the vehicle is in an area of localised Radio Frequency (RF) interference or the Smart key is shielded by metal objects, the vehicle may close and lock with no means of opening again.*

4. Panic alarm:
   - Press and hold for 3 seconds (or press 3 times within 3 seconds) to activate the horn and the hazard lamps.
   - Once active for more than 5 seconds, the alarm can be cancelled by pressing the button and holding for 3 seconds (or pressing 3 times within 3 seconds).
   - The emergency alarm will also be cancelled if a valid Smart key is present when the START/STOP button is pressed.
5. Approach illumination:
   - When approaching the vehicle during darkness, press to switch on the approach illumination. Press again to turn the approach lamps off.

     Note: *In some markets a second press of the button will turn on the headlamps and reversing lamps. A third press will be required to turn the lamps off.*
   - The approach illumination period set at the factory is 30 seconds. This delay period may be configured to provide illumination lasting between 0 and 240 seconds. See **46, INSTRUMENT PANEL MENU**.
6. Emergency key access: Slide open the side cover to release, then remove.
7. Remove the emergency key blade and unfold.
8. If the Smart key fails to open the vehicle, insert the key blade into the slot at the base of the driver's door lock cover and gently lever the key blade upwards. Carefully rotate the door lock cover upwards, to lever the cover off the retaining clips. Insert the key blade into the exposed lock and turn to operate the lock. The alarm will sound.

   Note: *When the driver's door is unlocked using the key blade, the alarm will sound until the Smart key is positioned correctly.*

   Note: *A replacement Smart key can be obtained only from a Land Rover Dealer/Authorised Repairer. The Land Rover Dealer/Authorised Repairer will require proof of identification and ownership.*

   Notify a Land Rover Dealer/Authorised Repairer immediately if a Smart key is lost or stolen.
9. Keyless entry/exit:
   - Exterior door handles have separate unlock and lock sensors. The unlock sensor is located on the inner surface of the handle.

SINGLE/MULTI-POINT ENTRY

When you press the unlock button, your vehicle will unlock in 1 of 2 ways:

1. Single Point Entry: Unlocks the driver's door and fuel filler only. A second press is required to unlock the remaining doors and the tailgate.
2. Multi-Point Entry: Unlocks all doors, fuel filler flap and the tailgate on the first press.

To change from Single to Multi-Point entry (or vice versa), press both the lock and unlock buttons simultaneously for 3 seconds. The hazard warning lamps will flash twice to confirm the change.

This feature may also be set via the **Vehicle Set-Up** menu. See **46, INSTRUMENT PANEL MENU**.

Note: *If, when the vehicle is unlocked, an audible warning is emitted, this will be a 'Mislock' error. There may be a fault with either of the alarm sensors. Consult with your Land Rover Dealer/Authorised Repairer as soon as possible.*

Entering the vehicle

GLOBAL OPENING

Press and hold the unlock button for 3 seconds to unlock the vehicle and open all windows.

To cancel global opening, press any of the buttons on the Smart key or operate the driver's window switches. To stop a particular window opening, operate the relevant window switch.

This feature can be enabled/disabled via the **Vehicle Set-Up** menu (see **46, INSTRUMENT PANEL MENU**).

KEYLESS ENTRY

Keyless entry allows the vehicle to be opened if a Smart key is within 1.0m (3ft) of the door handle or the tailgate external switch.

Note: *The Smart key may not be detected if it is placed within a metal container or if it is shielded by a device with a back-lit LCD screen, such as a smart phone, laptop (including laptop bag), games console etc. Keep the Smart key clear of such devices when attempting Keyless entry or Keyless starting.*

Note: *The Smart key needs only to be on the driver's person or in a non-metallic bag or briefcase. It does not need to be exposed or handled.*

To enter the vehicle, just pull the door handle. The alarm will be disarmed and the doors unlocked according to the current unlock/entry setting (Single or Multi-Point). The hazard warning lamps will flash twice as 'unlock' confirmation. Power folded mirrors will fold out (if enabled).

Note: *If Single Point Entry is the current security setting and a door other than the driver's door is opened first, all doors will unlock.*

CONVENIENCE MODE

When the door is opened using either the Smart key or keyless entry, the vehicle's electrical system initiates the convenience mode. The following systems become functional:

- Driver position memory.
- Seat and steering column adjustment.
- Interior and exterior lighting.
- Message centre.
- Auxiliary power socket.

STEERING COLUMN LOCK

The electric steering column lock will lock/unlock when the vehicle is locked/unlocked.

If any malfunction of the steering column lock occurs, a message will be displayed in the Message centre. If this occurs:

1. From the driver's seat, lock and then unlock the vehicle using the Smart key.
2. Try again to unlock the steering column lock, by turning the steering wheel gently to the left and right while locking and then unlocking the vehicle using the Smart key.
3. If the problem persists, seek qualified assistance.

DRIVE-AWAY LOCKING

Drive-away locking automatically locks all the doors when the vehicle is in motion. This feature can be enabled/disabled via the **Vehicle Set-Up** menu. See **46, INSTRUMENT PANEL MENU**).

Note: *Pressing the unlock or lock button on the driver or front passenger door after Drive-away locking has taken place, will override drive-away locking for the current journey. See* ***15, DOOR LOCKS AND RELEASE LEVERS****.*

OPENING AND CLOSING THE TAILGATE

While the tailgate is open, the locking latch is exposed. Do not attempt to manually close the latch as it may also automatically 'soft close' and trap items or body parts.

Make sure there is minimum space of 1.5 metres (58 inches) above and at the rear of vehicle before operating the tailgate. Insufficient space may result in damage to the vehicle.

Do not operate the tailgate if a cycle rack is fitted to the tailgate. Remove any cycles and/or racks before operating the tailgate.

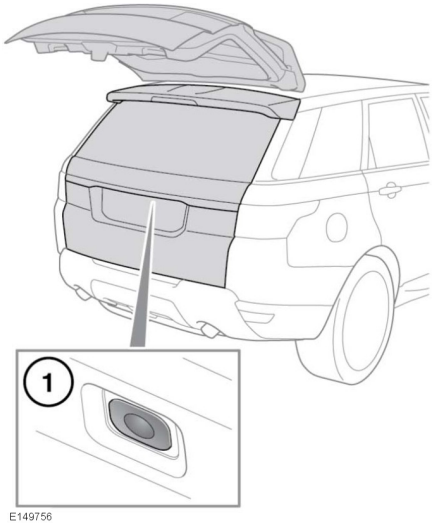

E149756

1. Tailgate release. Lift the tailgate to open.

Note: *The tailgate external release switch will operate if all doors are unlocked and the gear selector is in the Park (**P**) position. If the gear selector is in the Neutral (**N**) position, the switch will only operate if all doors are unlocked, and the ignition is in convenience mode or switched off. The switch will not operate if the gear selector is in any other position*

The tailgate can also be released using the following methods.

- The interior tailgate release switch. See **298, DRIVER CONTROLS**.
- The Smart key tailgate release switch. See **5, UNLOCKING THE VEHICLE**.

Note: *The tailgate will not open if the vehicle is travelling at or above approximately 5 km/h (3 mph).*

OPENING AND CLOSING THE POWERED TAILGATE

While the tailgate is open, the locking latch is exposed. Do not attempt to manually close the latch as it may also automatically 'soft close' and trap items or body parts.

Do not operate the tailgate if a cycle rack is fitted to the tailgate. Remove any cycles and/or racks before operating the tailgate.

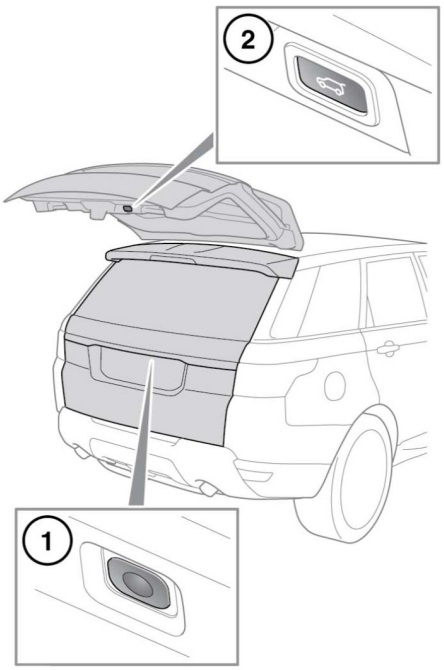

E149993

1. Tailgate open/close using the exterior button. Press to open, stop, reverse direction or close the tailgate.

   Note: *The tailgate external release switch will operate if all doors are unlocked and the gear selector is in the Park (**P**) position. If the gear selector is in the Neutral (**N**) position the switch will only operate if all doors are unlocked, and the ignition is in convenience mode or switched off. The switch will not operate if the gear selector is in any other position.*

2. Tailgate close. Press to close/stop the tailgate.

The tailgate can also be opened or closed using the following methods.

- The interior tailgate release switch. See **298, DRIVER CONTROLS**.
- The Smart key tailgate release switch. See **5, UNLOCKING THE VEHICLE**.

After the tailgate has opened to its set height, it can be manually raised or lowered. If the tailgate fails to open or close correctly, close it manually then press the tailgate release switch again.

As the closing tailgate approaches the closed position, it will 'soft close' to the fully-closed position. If the vehicle was previously locked, the alarm will re-arm. The hazard warning lamps will flash to confirm the alarm status. An audible confirmation may also be given.

Note: *If a tailgate switch is pressed while the tailgate is opening or closing, all movement will stop. However, if a switch is pressed during the 'soft close' stage, the open request will be ignored.*

Note: *The tailgate has a minimum closing height, below which it will not power close. Open the tailgate manually, or using a release switch, to the fully open position and then press the tailgate complete close button.*

Before operating the tailgate, make sure that anyone in the vicinity does not have any part of their body in a position where it could be trapped. Note that the 'soft close' action does not incorporate object detection. Death or serious injury could occur, even with an object detection system.

Object detection while opening: If an object is detected that would interfere with the tailgate opening, tailgate movement will stop. Remove any obstructions and press the tailgate switch again to open.

Object detection while closing: If an object is detected that would interfere with a tailgate closing, tailgate movement will stop and then reverse to the fully open position if able to do so. An audible warning will be given to indicate a mislock. Remove any obstructions and if the tailgate is open, press the tailgate switch again to close the tailgate. If the tailgate is not open, press a tailgate release switch to open the tailgate, remove any obstructions. Once the obstructions have been removed, press the tailgate close switch to close the tailgate.

While the tailgate is open, the locking platform and latch are exposed. Do not manually close the latch as it may also automatically 'soft close' and trap items or body parts.

TAILGATE OPENING HEIGHT

It is possible to set the maximum height to which a powered tailgate will open. This is useful in parking areas with very low roofs or just for ease of use.

1. Open the tailgate to the position which you want to set as the maximum height. Press the tailgate open button to stop movement or position manually once all movement has stopped.
2. Make sure that the tailgate is stationary for at least 3 seconds.
3. To set the opening height: Press and hold the tailgate close button, on the tailgate, until you hear a chime.
4. Close the tailgate, then open again to check that it opens to the programmed height.

Note: *If, after performing part 3 of the process the tailgate closes automatically, the required height has not been set. Repeat the process making sure all steps are adhered to.*

To reset the maximum opening height to full, repeat the process, but manually move it to the fully open position before pressing and holding the button.

The powered tailgate may lose its position memory if there are multiple object detections or if the battery voltage is low. Powered operation may be inhibited.

To reset the tailgate:

1. Manually close the tailgate.
2. Press a tailgate release switch.
3. Allow the tailgate to power fully open or to the previously set position.
4. Press and release the close switch.
5. Allow the tailgate to power close fully.

The tailgate programmed position memory will now be restored.

REMOTE KEY FOB BATTERY REPLACEMENT

When the battery needs replacing, there will be a significant decrease in the effective range and **SMART KEY BATTERY LOW** will be displayed in the Message centre.

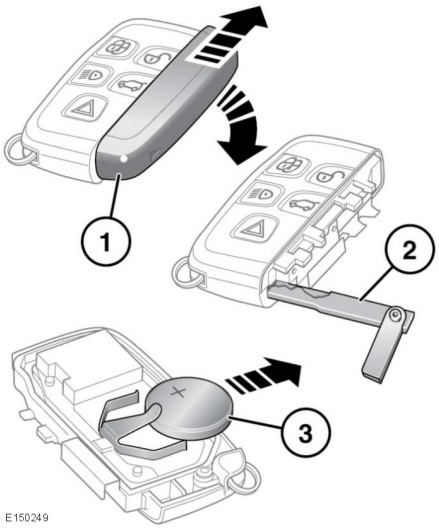

To replace the battery:

1. Remove the cover by sliding in the directions of the arrows.
2. Use the emergency key blade to separate the Smart key body.
3. Fit a new and unused CR2032 type battery (available from a Land Rover Dealer/Authorised Repairer) with the positive (+) side upwards.

Note: *Avoid touching the new battery. Moisture/oil from fingers can reduce battery life and corrode the contacts.*

Note: *If the low battery warning does not extinguish this indicates that the replacement battery is not in a new and unused condition.*

Refit the parts in reverse order, making sure they click securely into place.

Battery disposal: Batteries contain harmful substances and must be disposed of correctly. Seek advice on disposal from a Land Rover Dealer/Authorised Repairer and/or your local authority.

SINGLE LOCKING

Press the lock button on the Smart key briefly to single lock the vehicle and activate the perimeter alarm. The hazard warning lamps will flash to confirm.

Single locking secures the vehicle and prevents the doors from being opened from the outside. The doors may still be unlocked and opened from inside the vehicle. In this state, only the perimeter alarm is activated. See **13, PERIMETER ALARM**.

Note: *This setting should be used in circumstances, such as travelling on a ferry, when pets are to be left in the vehicle, or if a window must be left open etc.*

Note: *Always secure your vehicle when left unattended. Where possible, always secure your vehicle to the maximum available level of security.*

DOUBLE LOCKING

Never double lock the vehicle with people, children, or pets inside. In the event of an emergency they would be unable to escape and the emergency services would be unable to release them quickly.

Press the lock button on the Smart key twice within 3 seconds to double lock the vehicle and activate the full alarm system. The hazard warning lamps will flash twice to confirm and a double lock tone will sound..

Double locking secures the vehicle and prevents the doors being opened from inside or outside of the vehicle. The doors cannot be unlocked or opened from inside the vehicle when double locked.

This provides extra security if the vehicle is left unattended. The vehicle cannot be opened by breaking a window and operating the door locks from inside. Additionally, double locking also activates the full alarm system. See **13, FULL ALARM**.

Note: *In this state, an open window or sunroof will cause the alarm to sound due to the movement of air currents. For this reason, make sure that all windows and the sunroof are fully closed before double locking the vehicle.*

PERIMETER ALARM

The perimeter alarm system is activated when the vehicle is single locked. See**13, SINGLE LOCKING**. Once activated, the alarm system will sound if;

- the bonnet, tailgate or a door is opened.
- the engine **START/STOP** button is pressed without a valid Smart key present.

If the vehicle is fitted with a battery backed-up sounder, the sounder will sound if the battery is disconnected, or an attempt is made to disconnect the sounder.

FULL ALARM

The full alarm system is activated when the vehicle is double locked. See **13, DOUBLE LOCKING**. Once activated the alarm system will sound if:

- The bonnet, tailgate or a door are opened.
- Movement is detected within the vehicle interior.
- The vehicle is raised or tilted.

If the vehicle is fitted with a battery backed-up sounder, the alarm system will also sound if:

- The vehicle battery is disconnected.
- An attempt is made to disconnect the battery backed-up sounder.

INTERIOR PROTECTION

The interior protection feature of the full alarm system may be temporarily disabled via the **Vehicle Set-Up** menu. See **46, INSTRUMENT PANEL MENU**.

Note: *Once disabled, this setting will be re-enabled the next time the vehicle is double locked with the Smart key.*

KEYLESS LOCKING

Never double lock the vehicle with people, children or pets inside. In the event of an emergency they would be unable to escape and the emergency services would be unable to release them quickly.

The vehicle will not lock automatically.

The Smart key may not be detected if it is placed within a metal container or if it is shielded by a device with a back-lit LCD screen, such as a smart phone, laptop (including in a laptop bag), games console etc.

Note: *Loose coins in the same pocket as the Smart key may also affect its detection.*

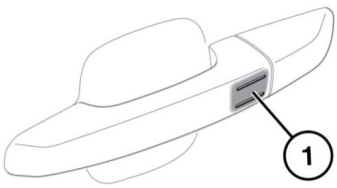

E149763

Note: *Keyless locking will activate only if the Smart key is detected outside the vehicle. If no Smart key is present, no locking will occur.*

- To single lock the vehicle touch only the keyless locking sensor (**1**) once without grabbing the door handle.

  Note: *Do not place your fingers around the back of the door handle while touching the sensor. Doing so will prevent the vehicle from locking.*
- The hazard warning lamps will flash once to confirm locking and the power fold mirrors will fold in (if enabled).
- To double lock the vehicle, touch only the keyless locking sensor (**1**) twice within 3 seconds.

  Note: *Do not place your fingers around the back of the door handle while touching the sensor. Doing so will prevent the vehicle from locking.*
- The hazard warning lamps will flash twice accompanied by an audible sound to confirm locking .

Note: *When locking the vehicle via Keyless locking, if a valid key is not present, 1 or more of the doors, the bonnet or the tailgate is not fully closed, or the ignition is ON, the vehicle will NOT lock. There will be NO audible mislock error warning. The hazard warning lamps will NOT flash and the door mirrors (if enabled) will NOT fold in. Check that all doors, the bonnet and the tailgate are closed properly. Make sure that the ignition is turned OFF and lock the vehicle again. If the mislock persists, consult a Dealer/Authorised Repairer.*

GLOBAL CLOSING

Make sure that no children, pets, or obstructions are in any open aperture before operating global closing. Safety mechanisms are in place to prevent serious injury, however injuries can still occur.

Press and hold the lock button on the Smart key for 3 seconds. The vehicle will single lock and the perimeter alarm will be activated immediately. After 3 seconds any open windows and the sunroof will be closed. Press the lock button twice in 3 seconds to double lock the vehicle.

This feature can be enabled/disabled via the **Vehicle Set-Up** menu. See **46, INSTRUMENT PANEL MENU**.

With a valid Smart key present, press and hold the keyless locking sensor (if fitted) on any exterior door handle. The vehicle will single lock and the perimeter alarm will be activated immediately. After approximately 3 seconds, any open windows and the sunroof will begin to close.

Keep the keyless locking sensor pressed until all open windows and the sunroof are fully closed. Releasing the keyless locking sensor will stop all window and sunroof movement.

When all windows and sunroof are closed, release and then press the keyless locking sensor to confirm the vehicle is single locked. Alternatively, press the keyless locking sensor twice within 3 seconds to double lock the vehicle.

This feature can be enabled/disabled via the **Vehicle Set-Up** menu. See **46, INSTRUMENT PANEL MENU**.

DOOR LOCKS AND RELEASE LEVERS

While a door is open, the locking latch is exposed. If your vehicle is fitted with the soft close feature, do not attempt to manually close the latch as it may also automatically 'soft close' and trap items or body parts.

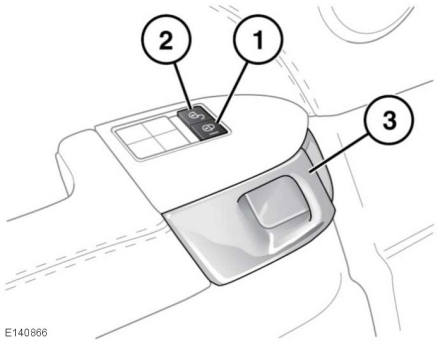

1. Lock:
   - With all doors closed, press any lock button to lock all doors.
2. Unlock:
   - Press any unlock button to unlock all doors. Alternatively, pull either front door release handle (**3**) once to unlock all doors.
   - Pull either rear door release handle (**3**) once to unlock the individual rear door.

   Note: *All unlock buttons are inhibited when the vehicle is locked with the Smart key.*
3. Door release handle: pull to unlock and open the door(s). If the door is locked, pulling either front door handle once will unlock all doors. Pulling either rear door handle once will unlock the individual rear door.

   Note: *The rear child security feature will inhibit the rear door lock (**1**) and unlock (**2**) switches, and the door release handles (**3**).* ***33, CHILD SAFETY LOCKS***

MISLOCK

When attempting to lock the vehicle with the Smart key, if a valid key isn't present, if 1 or more of the doors, the bonnet or the tailgate is not fully closed or the ignition is ON, the vehicle will NOT lock and an audible warning will sound twice. Make sure the ignition is turned off and lock the vehicle again. The vehicle will NOT fully lock until all doors, the bonnet and the tailgate are completely closed.

An audible mislock warning will also sound if on locking, the system detects a lock or latch failure. If the mislock persists, consult your Dealer/Authorised Repairer.

DEACTIVATING THE ALARM WHEN TRIGGERED

If the alarm has been triggered it can be deactivated by pressing the Smart key unlock button, or by positioning the Smart key against the steering column and pressing the engine **START/STOP** button. See **98, KEYLESS START BACKUP**.

EMERGENCY LOCKING

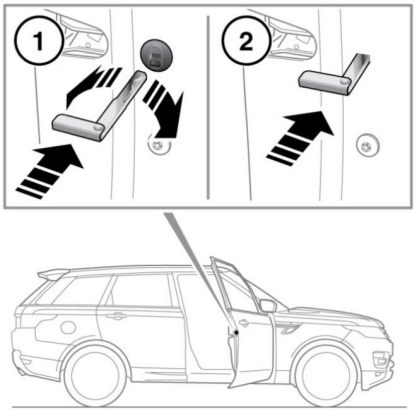

E149765

In the event of the battery discharging or a fault with the keyless locking system, the doors must be locked manually.

Note: *Do not leave the emergency key blade in the vehicle at any point during the emergency locking procedure.*

1. Open the door and locate the emergency lock access cover. Using the emergency key blade (see **5, UNLOCKING THE VEHICLE**) rotate the cover to release it from the door. Remove the cover and store it safely.
2. Insert the emergency key blade firmly into the emergency lock.
   The emergency key blade can now be removed.
3. Refit the emergency lock access cover and rotate it clockwise to secure it firmly.
4. Close the door and check to make sure the door is locked.
   Repeat the procedure for all other unlocked doors.

ELECTRIC SEATS

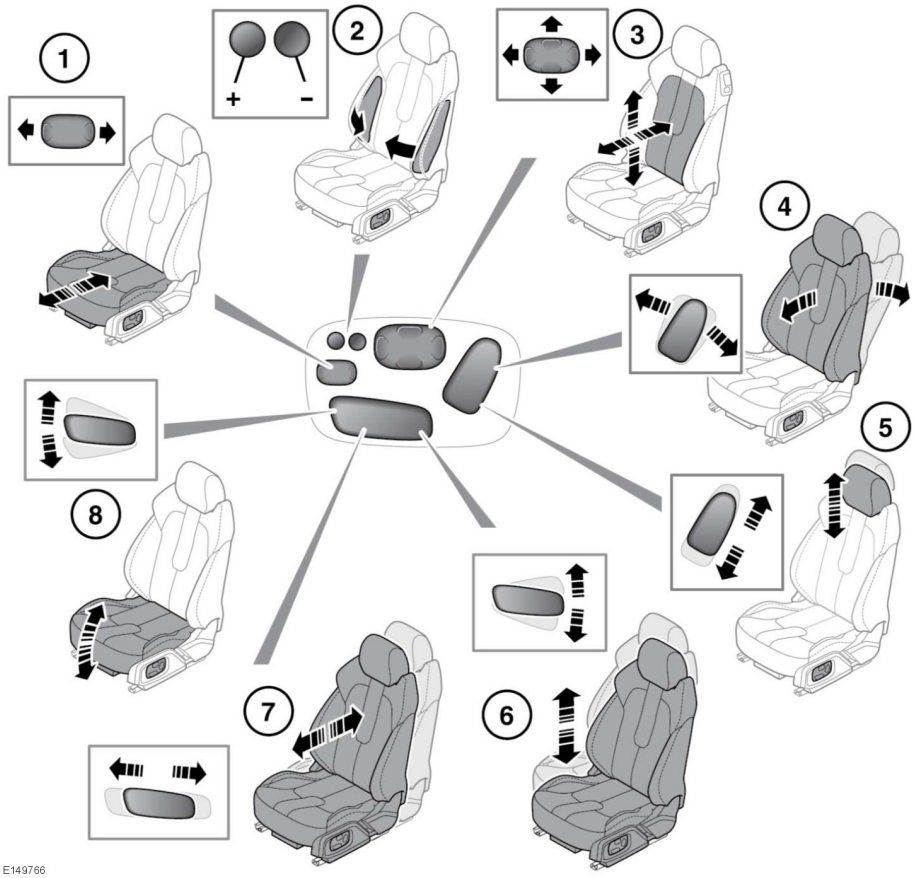

Do not adjust the seat while the vehicle is moving. Doing so could cause loss of vehicle control and personal injury.

Note: *This diagram covers all electric seat controls. Not all of these controls apply to all seats.*

1. Cushion length.
2. Bolster inflate/deflate.
3. Lumbar support.
4. Seat back angle.
5. Head restraint height.
6. Seat height.
7. Forward and rearward position.
8. Cushion tilt.

The front seats can also have:

- Heated/climate control (see **75, CLIMATE CONTROL**).

RESTRICTED FRONT SEAT TRAVEL

If seat movement stops unexpectedly during adjustment, check for and remove any obstructions.

Once any obstructions have been removed, the seat adjustment mechanism can be reset as follows:

Operate the button again to continue the stalled adjustment. When seat movement resumes, hold the button until the end of travel in that direction has been reached. Seat adjustment can now be carried out as normal.

Note: *If no obstructions can be seen, but normal adjustment cannot be carried out without stalling, contact your Land Rover Dealer/Authorised Repairer.*

SITTING IN THE CORRECT POSITION

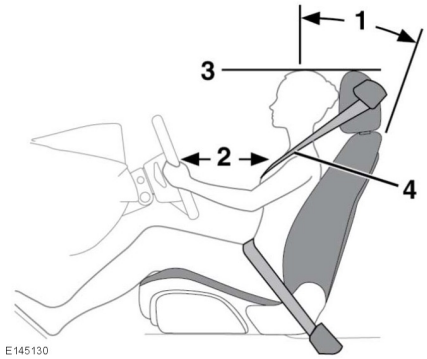

The driver and front seat passenger must not ride with the seat fully reclined.

Do not adjust the seat while the vehicle is moving.

The seat, head restraint, seat belt and airbags, all contribute to the protection of the user. Correct use of these components will give you greater protection. Therefore, you should always observe the following points:

1. Sit in an upright position, with the base of your spine as far back as possible. To achieve optimum benefit of the seat belt in the event of an accident, do not recline the seat excessively.
2. Do not move the driver's seat too close to the steering wheel. Ideally, a minimum distance of 254 mm (10 inches) is recommended between the breastbone and the steering wheel airbag cover. Hold the steering wheel in the correct position, with your arms slightly bent.
3. Adjust the head restraint so that the top of the head restraint is the same height as the top of the head.
4. Position the seat belt so that it is mid-way between your neck and your shoulder. Fit the strap tightly across your hips, not across your stomach.

Make sure that your driving position is comfortable and enables you to maintain full control of the vehicle

FOLDING ARMREST

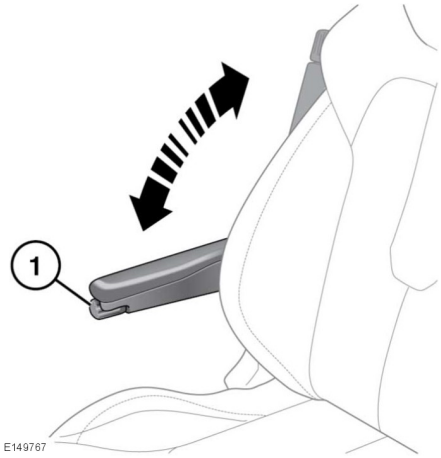

Use the adjuster wheel (**1**) to set the required height. The folding armrest may be stowed by moving to the vertical position.

SEAT POSITION MEMORY

Once you have adjusted the power operated driver's seat, steering column (see **27, ADJUSTING THE STEERING WHEEL**) and exterior mirrors (see **61, EXTERIOR MIRRORS**) for your ideal driving position, the settings can be stored for future use.

Passenger seat position can also be changed, follow the same procedure as for the driver's seat. Press the memory button to store the current seat settings.

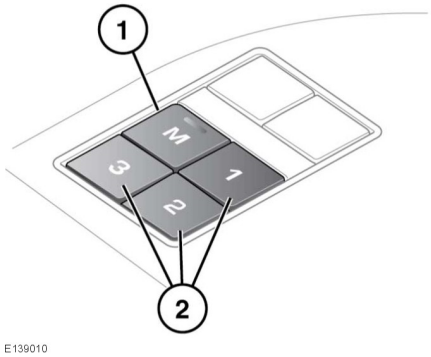

1. Press the memory store (M) button to activate the memory function.
2. Press 1 of the preset buttons within 5 seconds to store the current settings. **MEMORY (1, 2 or 3) SETTINGS SAVED** will be displayed in the Message centre, accompanied by an audible chime to confirm the settings have been stored.

   Note: *A seat position will only be stored during the 5 second active period.*

   Note: *Any existing settings will be over-written when storing a new position.*
3. To recall a stored position, press the relevant preset button. **MEMORY (1, 2 OR 3) RECALLED** will be displayed in the Message centre.

Note: *The memory function for all passenger seats will not trigger any messages in the Message centre.*

MANUAL SEATS

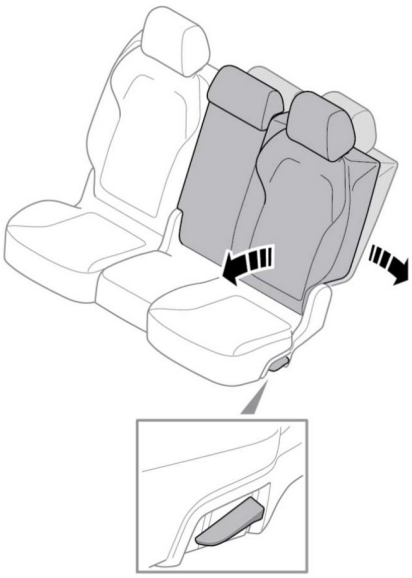

E149768

To adjust the angle of the seat back:

1. Lift the adjustment lever.
2. Adjust the seat back to the desired angle.
3. Release the adjustment lever.

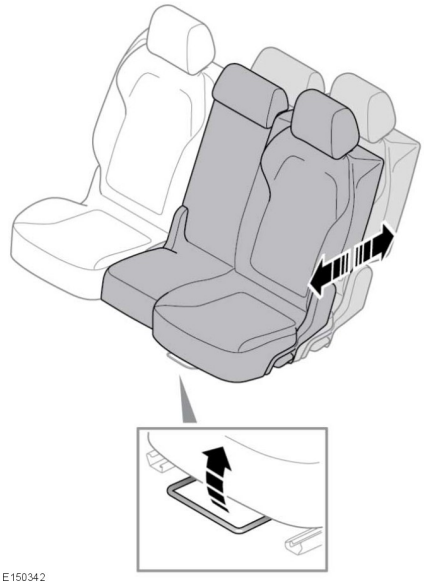

E150342

Forward and back adjustment.

PASSENGER SEAT AWAY

E150158

Use the switch for forward or rearward adjustment.

The front passenger seat position can be adjusted to provide more space for rear seat occupants.

FOLDING AND RAISING THE REAR SEATS

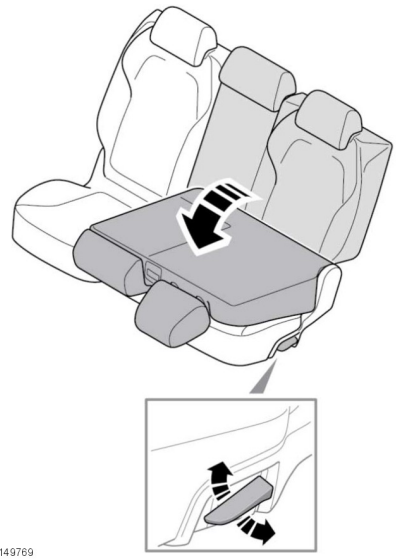

E149769

Always make sure that objects carried in the vehicle are secured properly.

Never allow passengers to travel in the load space under any circumstances.

Make sure that when the seat back is raised, the locking mechanism is fully engaged.

When raising the rear seats, make sure the seat belts are correctly routed in the seat belt guides and not trapped behind the seats.

Make sure the head restraints are raised to the correct position before the seats are used by a passenger.

Raise the release lever. The seat back will fold down against the seat cushion. Lift the seat back to raise to the upright position and make sure the seat back is locked firmly in position.

The split fold rear seat can be folded completely to accommodate large loads, or partially to accommodate large loads and still retain seating for passengers.

REAR SEAT ACCESS

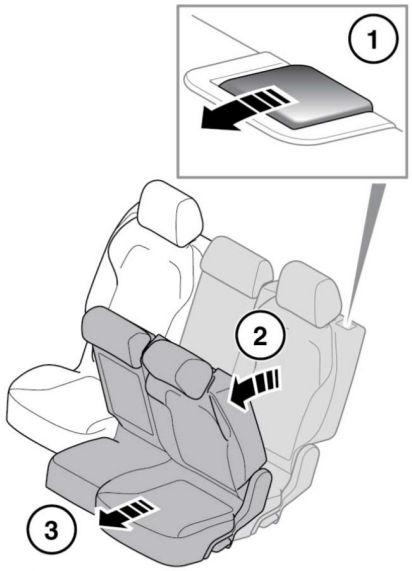

E150695

To access the third row seats.

1. Pull the seat back lever forwards.
2. Fold the seat back forward.
3. Slide the seat forwards.

Rear seats

To return the seat to the upright position, slide the seat rearward and raise the seat back until the latching mechanism clicks into position.

Make sure that when the seat back is raised, the locking mechanism is fully engaged.

When raising the rear seats, make sure that seat belts are correctly routed in the seat belt guides and not trapped behind the seats.

Make sure the head restraints are raised to the correct position before the seats are used by a passenger.

FOLDING AND RAISING THE THIRD ROW SEATS

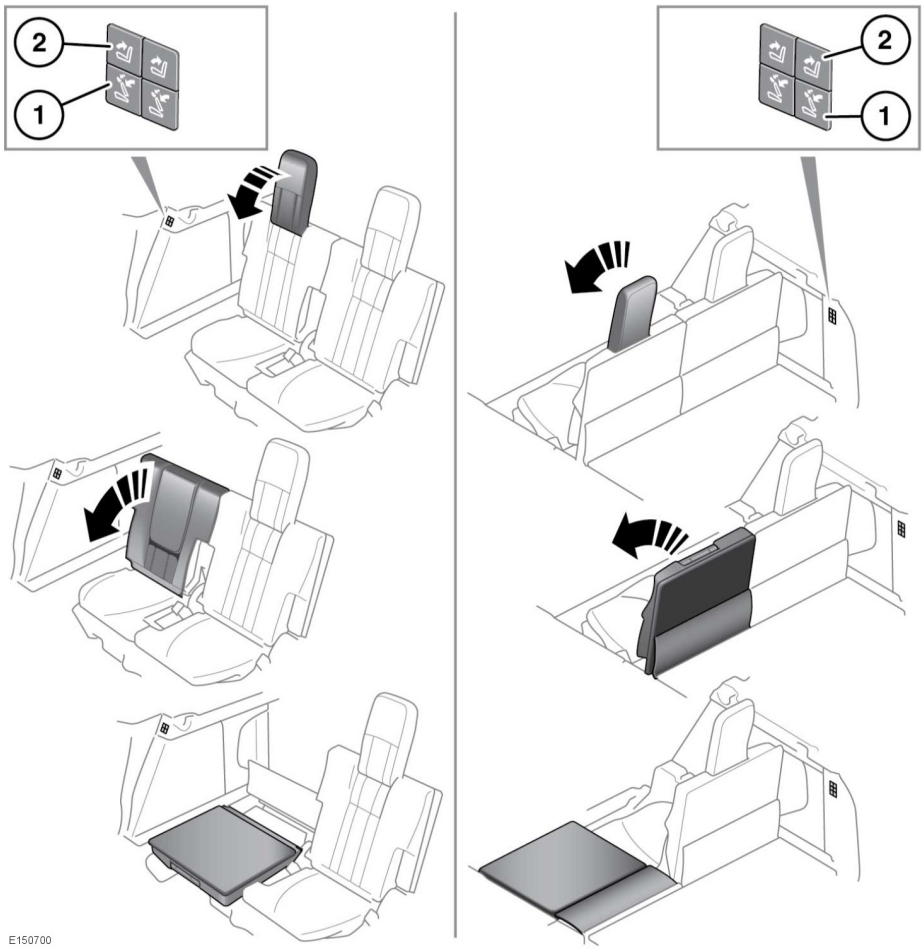

To avoid injury, the loadspace cover must not be left in the installed position when the third row seats are occupied.

Beware of trapping fingers when raising and lowering the third row seat.

When raising the rear seats, make sure the seat belts are correctly routed into the seat belt guides and not trapped behind the seats.

Rear seats

Make sure nothing has been left under the third row seat, or in the footwell, when folding down the seat, as this could cause damage to the item or the seat.

Always make sure that objects carried in the vehicle are secured properly.

Never allow passengers to travel in the load space, under any circumstances.

The third row seats can be folded or raised individually using the buttons located behind the second row seats or the side of the loadspace.

Note: *The loadspace cover must be removed before folding or raising the third row seats. This can be stored in the loadspace.*

1. **To fold:** Press the button once, to fold the head restraint fully downwards. Press the button once again and the seat back will fold.
2. **To raise:** Press to raise the seat back to the upright position.
3. Manually raise the head restraint until it latches into position.

Note: *If the electric seats are operated more than 3 times through the full fold/raise sequence in quick succession, the system will be disabled for 2 minutes.*

The head restraint must always be raised when using the third row seats.

Make sure that when the head restraint is raised, the locking mechanism is fully engaged.

The head restraint must always be folded down before folding the seat back.

RESTRICTED REAR SEAT TRAVEL

If electric seat movement stops unexpectedly during folding or raising, check for and remove any obstructions.

Once any obstructions have been removed, continue the seat movement by pressing the appropriate fold/raise button.

Note: *If no obstructions can be seen, and normal movement cannot be carried out, contact your Dealer/Authorised Repairer.*

HEAD RESTRAINTS

Adjust, so that the top of the head restraint is the same height as the top of the seat occupant's head. Incorrect adjustment increases the risk of death or serious injury in the event of a collision.

Do not drive, or carry passengers with the head restraints removed from occupied seats. The absence of a correctly adjusted head restraint increases the risk of neck injury in the event of a collision.

Never adjust the head restraints while the vehicle is in motion.

Always store a removed head restraint securely.

ELECTRIC HEAD RESTRAINTS

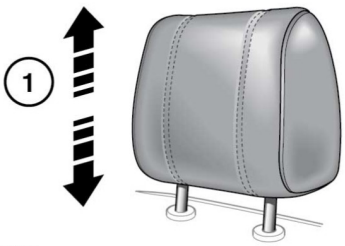

E150730

1. To adjust the height of the head restraint. See **17, ELECTRIC SEATS**.

   Note: *It is not possible to remove electric head restraints.*

MANUAL HEAD RESTRAINTS

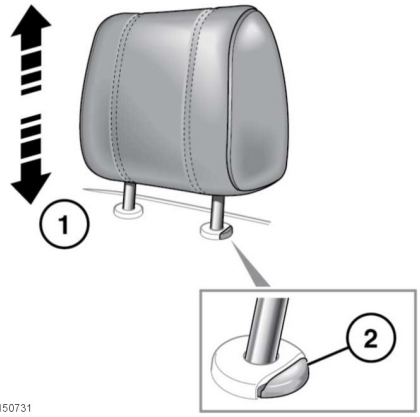

E150731

1. To raise, pull the head restraint upwards. It will click and lock in position.
2. To lower, depress the locking button and push down on the restraint.

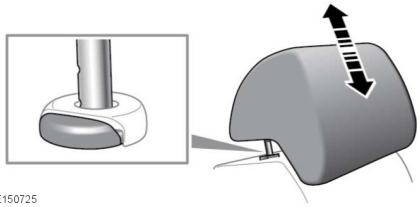

E150725

1. To raise, pull the head restraint upwards. It will click and lock in position.
2. To lower, depress the locking button and push down on the restraint.

HEAD RESTRAINT REMOVAL

Always store a removed head restraint securely.

Head restraints

Do not drive, or carry passengers with the head restraints removed from occupied seats. The absence of a correctly adjusted head restraint increases the risk of neck injury in the event of a collision or sudden stop.

Manual head restraints may be removed, if required (e.g. to fit larger child seats).

1. Raise the head restraint to its uppermost position and press the locking collar.
2. Lift the restraint out of the seatback

Make sure the head restraint is refitted before the seat is used by a passenger.

1. Make sure the restraint is facing the correct direction.
2. Insert the stems of the head restraint into the sockets on the seatback.
3. Push the restraint downwards until at least the first click.

Note: *See* ***36, RECOMMENDED CHILD SEATS****, for details on correct child restraint installation*

ADJUSTING THE STEERING WHEEL

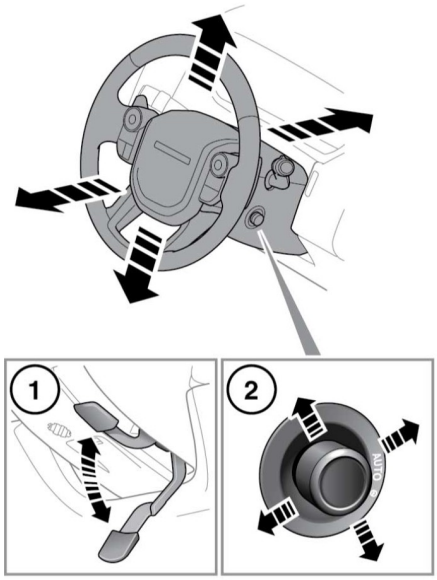

E149770

Never adjust the steering column while the vehicle is in motion.

1. **Manual adjustment:** Move the locking lever (located under the column) downwards to unlock. Move the steering column up, down, in or out, to the desired position.
   Move the lever fully up to re-lock the column.
2. **Electric adjustment:** Move the control up or down to adjust the tilt/height.
   Move the control forwards or rearwards to adjust reach.

ENTRY AND EXIT MODE

With the steering column control (**2**) in the **AUTO** position, the steering column and driver's seat will move to provide easier entry and exit from the vehicle.

On opening the driver's door, the system will raise the steering column to the highest position and lower the driver's seat to a lower position, assisting with exit from the vehicle. When the driver's door is closed and the ignition turned on, the system will return the driver's seat and steering column to the previous position.

Note: *If the driver's seat or steering column are adjusted during entry or exit operation, automatic movement will stop.*

To prevent automatic movement of the driver's seat and steering column, turn the control clockwise to the manual position.

Note: *If the steering column switch is moved away from **AUTO** when the driver's seat and steering column is in the exit position, the driver's seat and steering column will move back to their previous positions when the driver's door is closed and the ignition is switched on.*

HEATED STEERING WHEEL

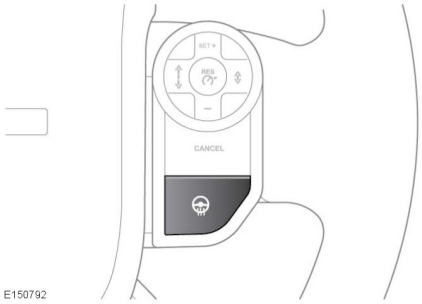

E150792

Press the button to turn the heating steering wheel feature on and off. An amber indicator will illuminate when the heated steering wheel feature is on.

Steering wheel

POWER STEERING

A fault with the power steering system is indicated by a message in the Message centre, accompanied by an amber warning lamp (see **49, GENERAL WARNING/INFORMATION MESSAGE (AMBER)**). A reduction in power steering assistance may be experienced. The fault may be caused by overheating due to extensive steering inputs or high ambient temperatures.

Full steering assistance should return when the system has been allowed to cool. If full steering assistance does not return, consult a Land Rover Dealer/Authorised Repairer.

USING THE SEAT BELTS

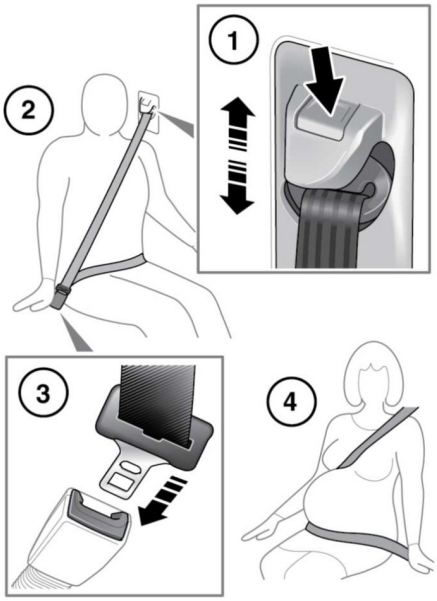

E140967

1. **Seat belt height adjustment:** Press to release the catch.
   With the catch depressed move the mechanism slide up or down to the required height. Make sure the locking mechanism has engaged.
   When correctly positioned the seat belt should cross the collar bone at the mid-point between the neck and end of your shoulder.
   Where possible, rear seat passengers should adjust their position on the seat, to enable the seat belt webbing to cross the shoulder without pressing on the neck.

Make sure the height is correctly adjusted and the mechanism is locked in place before driving.

The use of comfort clips or devices that would create slack in the seat belt system is not advised.

WARNING: No modifications or additions should be made by the user which will either prevent the seat belt adjusting devices from operating to remove slack, or prevent the seat belt assembly from being adjusted to remove slack.

2. **Putting on a seat belt**: Draw the belt out smoothly, make sure the belt height, the seat and the occupant's position on the seat, are correct.

WARNING: Seatbelts are designed to bear upon the bony structure of the body, and should be worn low across the front of the pelvis or the pelvis, chest and shoulders, as applicable; wearing the lap section of the belt across the abdominal area must be avoided.

Seatbelts should be adjusted as firmly as possible, consistent with comfort, to provide the protection for which they have been designed. A slack belt will greatly reduce the protection afforded to the wearer.

Belts should not be worn with straps twisted.

Each belt assembly must only be used by one occupant; it is dangerous to put a belt around a child being carried on the occupant's lap.

The occupants of the front seats should not travel with the seat back reclined excessively. Doing so will reduce the protection afforded by the seat belt.

Seat belts

Never place anything between you and the seat belt in an attempt to cushion the impact in the event of an accident. It can be dangerous, and will reduce the effectiveness of the seat belt in preventing injury.

3. **Fastening a seat belt:** With the seat belt correctly positioned, place the metal tongue into the buckle nearest to you. Press it in until a click is heard.
   To release the seat belt, press the red button.

   Note: *When releasing the seat belt it is advisable to hold the belt before pressing the release button. This will prevent the belt from retracting too quickly.*

4. **Seat belt use during pregnancy**: Position the lap strap comfortably across the hips beneath the abdomen. Place the diagonal part of the seat belt between the breasts and to the side of the abdomen, as illustrated. Make sure the seat belt is not slack or twisted.

Position the seat belt correctly for the safety of the mother and the unborn child. Never wear just the lap strap and never sit on the lap strap while using just the shoulder strap. Both of these actions are extremely dangerous and may increase the risk of serious injury in the event of an accident or during emergency braking.

SEAT BELT SAFETY

Care should be taken to avoid contamination of the webbing with polishes, oils and chemicals, and particularly battery acid. Cleaning may safely be carried out using mild soap and water.

The belt should be replaced if webbing becomes frayed, contaminated or damaged.

It is essential to replace the entire assembly after it has been worn in a severe impact even if damage to the assembly is not obvious.

If any damage, wear, cuts, defects, or impaired operation are noted with the seat belts, the vehicle should be taken to a Land Rover Dealer/Authorised Repairer for immediate attention. Do not use the vehicle if the seat belts cannot be operated correctly.

Do not carry hard, fragile, or sharp items between your person and the seat belt.

Seat belts should be worn by all vehicle occupants, for every journey no matter how short.

Never wear just the lap belt or just the shoulder belt of a lap/shoulder diagonal seat belt. Both of these actions are extremely dangerous and may increase your risk of injury.

When using seat belts to restrain items other than occupants, take care to make sure the belts are not damaged, or exposed to sharp edges.

SEAT BELT CHECKS

Note: *If the vehicle is parked on an incline, the seat belt mechanism may lock. This is not a fault and the belt should be gently eased out from the upper anchorage.*

The seat belts should be inspected regularly to check for fraying, cuts, wear to the webbing and the condition and security of the mechanism, buckles, adjusters and mounting points.

- With the seat belt fastened, give the webbing near the buckle a quick upward pull. The buckle must remain securely locked.
- With the seat belt unfastened, unreel the seat belt to the limit of its travel. Check that it unreels smoothly with no snatches or snags. Allow the belt to fully retract, again checking for smooth operation.
- Partially unreel the seat belt, then hold the tongue plate and give a quick forward pull. The mechanism must lock and prevent any further unreeling.

If any of the seat belts fail to meet those criteria, immediately contact your Dealer/Authorised Repairer.

SEAT BELT PRE-TENSIONERS

The seat belt pre-tensioners activate in conjunction with the Supplementary Restraint System (SRS) to provide extra protection in the event of a severe frontal impact.They automatically reduce any slack in a seat belt to reduce forward movement of a seat occupant.

The seat belt pre-tensioners will activate only once and then must be replaced. Failure to replace them will reduce the effectiveness of the SRS in reducing the risk of serious injury or death in the event of an accident.

After any impact, have the seat belts and pre-tensioners checked and if necessary, replaced by a Dealer/Authorised Repairer.

SEAT BELT REMINDER

Seat belt reminder commences when the vehicle is in motion and the driver's belt is unbuckled. Dependent on market, the warning indicator in the Instrument panel illuminates (See **50, SEAT BELT (RED)**), and an audible chime sounds. The visual and audible warnings applicable to the Seat belt reminder feature are market dependent to meet individual market requirements. The warning signals given may also change depending on whether the vehicle is stationary or when the vehicle speed exceeds a pre-determined threshold. In certain markets, the Seat belt reminder feature also applies to the front passenger seat.

The Message centre also displays a front and rear seat belt reminder that warns the driver when the seat belt of any occupied seat is not fastened or is unfastened during a journey.

E151118

- Each seating position is represented by a passenger icon, the colour and symbol of which indicates the seat belt status:
  - Tick - seat belt in the indicated position is fastened.
  - Cross - seat belt in the indicated position has been unfastened while the vehicle ignition is on. This indicator will turn grey after 30 seconds.
  - Grey - seat belt not fastened.

Note: *The indicators will be displayed for 30 seconds each time there is a status change, e.g., a seat belt is unfastened or fastened or a door is opened and then closed.*

- In addition, an audible warning will sound under the following conditions:
  - The seat belt of an occupied front seat is not fastened or is unfastened during a journey.
  - A rear seat belt is unfastened.

Note: *Objects placed on the front passenger seat may activate the seat belt reminder warning chime and indicator. It is recommended that any objects placed on the front passenger seat are secured using the seat belt.*

CHILD SAFETY LOCKS

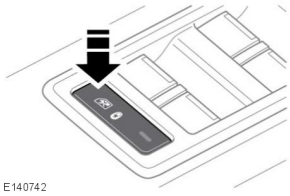

If children are to be carried in the rear seat positions, it is recommended that the rear door interior handles are disabled.

Press the switch to activate the child door locks and inhibit the rear windows. The LED indicator will illuminate when active and a message will display in the Message centre.

To switch off, press the switch again. The LED will extinguish and a message will display in the Message centre.

CHILD SEATS

For optimum safety, children should travel in the rear of the vehicle at all times; front passenger seat travel is not recommended. However, if it is essential that a child travels in the front (not permitted in Australia), set the vehicle seat fully rearward and seat the child in an approved forward-facing child seat. Do not use a rear-facing child seat - an inflating airbag could impact with the seat and cause serious injury.

Do not use a forward facing child seat until the child using it is above the minimum weight of 9 kg (20 lb.) and able to sit up unaided. Up to the age of 2, a child's spine and neck are not sufficiently developed to avoid injury in a frontal impact.

Do not allow a baby or infant to be held or carried on the lap. The force of a crash can increase effective body weight by as much as thirty times, making it impossible to hold onto the child.

Children typically require the use of a booster seat appropriate to their age and size, thereby enabling the seat belts to be properly fitted, reducing the risk of injury in a crash. Children could be endangered in a crash if their child restraints are not properly secured in the vehicle.

Do not use a child seat that hooks over the seat back. This type of seat cannot be satisfactorily secured and is unlikely to be safe for your child.

NEVER use a rearward facing child restraint on a seat protected by an ACTIVE AIRBAG in front of it, DEATH or SERIOUS INJURY to the CHILD can occur.

The seat belts fitted to your vehicle are designed for adults and larger children. For their safety it is very important for all infants and children under 12 years of age to be restrained in a suitable child safety seat appropriate to their age and size.

The following symbols warn against the use of a rear-facing child seat in the front passenger seat, when a front passenger airbag is fitted and is operational.

Extreme Hazard! Do not use a rearward facing child restraint on a seat protected by an airbag in front of it!

E132397

This symbol is fixed to the end of the fascia on the passenger side.

E145193

This symbol is fixed to the passenger side sun-visor.

If it is essential that a child travels in the front passenger seat (and national legislation permits this), Land Rover recommends that the following preparations are made before fitting the child restraint.

- Disable the front passenger airbag.
- Adjust the front passenger seat fully rearwards.
- Adjust the lumbar support to its minimum support position.
- Adjust the seat cushion to its highest position. If cushion rake adjustment is possible, adjust it to its lowest position.
- Adjust the seat back to the upright position to support the child restraint.
- Adjust the seat belt adjustable upper anchorage to its lowest position.

CHILD RESTRAINT CHECK LIST

Every time a child travels in the vehicle observe the following:-

- Carefully follow the instructions provided by the manufacturer of the restraint system.
- Always use the appropriate child restraints and adjust harnesses for every child, every trip.
- Adjust the harnesses for every child on every trip.
- Make sure all slack is removed from the adult seat belt.
- Always attach the top tether when installing an ISOFIX seat.
- Always check the security of the child restraint.
- Do not dress a child in bulky clothing, or place any objects/padding between the child and the restraint.
- Regularly check the fit and condition of child restraints. If the fit is poor, or wear/ damage is visible replace the restraint immediately.
- Set a good example - always wear your seat belt.
- On child seats fitted with a support leg adjust the leg so that it rests firmly onto the floor.

- For some child seats it may be necessary to remove the head restraint to ensure a stable fit. Always refit a removed head restraint after the child seat is removed. See **25, HEAD RESTRAINT REMOVAL**.

child restraint anchorages are designed to withstand only those loads imposed by correctly fitted child restraints. Under no circumstances are they to be used for adult seat belts, harnesses or for attaching other items or equipment to the vehicle.

CHILD SEAT POSITIONING

Information given within the table is correct at the time of going to press. However, availability of child restraints may change. Please consult your Dealer/Authorised Repairer for the latest recommendation.

Note: *The information contained in the following table may not be applicable to all countries. If you are in any doubt regarding the type and fitment of child seats seek advice from your Dealer/Authorised Repairer.*

Crash statistics show that children are safest when properly restrained in a child or infant restraint system that is secured in a rear seating position.

Note: *Ages given are approximate. In case of doubt, the child's weight, not age, should be used when considering an appropriate child seat.*

Note: *The legislation which governs how and where children should be carried when travelling in a vehicle, is subject to change. It is the responsibility of the driver to comply with all regulations in force.*

Mass group.	**0 = Up to 10 kg (22 lb) 0-9 months**	**0+ = Up to 13 kg (29 lb) 0-18 months**	**I = 9-18 kg (20-40 lb) 9 months to 4 years**	**II = 15-25 kg (33-55 lb) 4-9 years**	**III = 25-36 kg (55-80 lb) 8-12 years**
Seating positions					
Front passenger*	U	U	U	U	U
Rear seats	U	U	U	U	U
Third row seats	X	X	X	X	X

- U = Suitable for universal category restraints approved for this mass group.
- UF = Suitable for Forward-facing universal category restraints approved for this mass group.
- X = not suitable for children in this mass group.

* Always make sure the passenger airbag has been disabled before using a child restraint in this seating position. Adjust the seat back to the upright position to support the child restraint. If the head restraint has been removed, make sure it is refitted before the seat is used by a passenger.

Child safety

RECOMMENDED CHILD SEATS

Child size/age	Recommended seat
Groups 0 and 0+	Britax/Römer Baby Safe Plus
Group I	Britax/Römer Duo Plus
Group II and III	Britax/Römer Kid Plus

ISOFIX ANCHOR POINTS

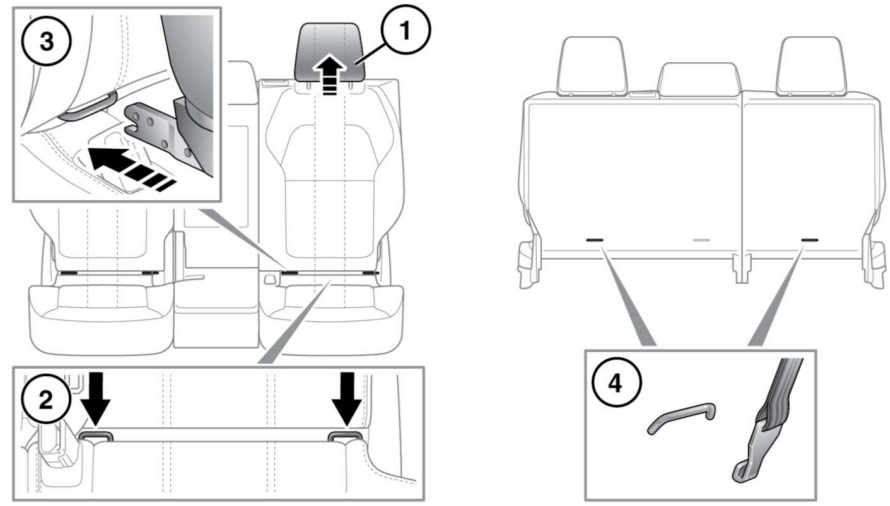

E150793

Both of the outer seat positions on the rear, second row seat are equipped to accept ISOFIX restraints.

This symbol is shown on a label sewn into the seats to indicate the position of the ISOFIX lower anchorages.

To install an ISOFIX child seat:-

1. Raise or remove the head restraint.
2. ISOFIX anchor points are in the fold of the seats.
3. Slide the child seat locking mechanism into the anchor point.
4. Upper tether anchorages are provided on the rear of the second row, 2 outer seats.
5. Hook the tether to the tether anchorage and tighten to secure.

Note: *Always make sure if an upper tether is provided, it is fitted and tightened correctly.*

Test the security of the child restraint. To do this, attempt to pull the restraint away from the vehicle seat and twist the restraint from side to side. Even if the restraint appears secure, you should still check the anchor points visually, to make sure correct attachment.

Do not attempt to fit ISOFIX restraints to the rear, second row centre seating position. The anchor bars are not designed to hold an ISOFIX restraint in this position.

If the restraint is not correctly anchored, there is a significant risk of injury to the child in the event of a collision or emergency braking.

Note: *Always refit a removed head restraint after the child restraint is removed. See* ***25, HEAD RESTRAINT REMOVAL****.*

ISOFIX child seat positions

Mass group as shown on child restraint	Size classes	Fixtures	Rear outboard seats
Carrycot	F/G	ISO L1/L2	X
0 = Up to 10 kg (22 lb) 0-9 months	E	ISO R1	IL*
0+ = Up to 13 kg (29 lb) 0-18 months	C/D/E	ISO R1/R2/R3	IL*
I = 9 to 18 kg (20 to 40 lb) 9 months - 4 years	C/D A/B1/B	ISO R2/R3 ISO F2/F2X/F3	X IUF
II = 15 to 25 kg (33 to 55 lb) 4-9 years	N/A	N/A	N/A
III = 22 to 36 kg (49 to 80 lb) 8-12 years	N/A	N/A	N/A

- IUF = Suitable for ISOFIX forward child restraint systems of universal category approved for use in the mass group.
- IL = These ISOFIX child restraint systems are of the specific vehicle, restricted or semi-universal categories.
- X = Not suitable for ISOFIX child restraint fitment in this mass group.
- * = Child seat suitable for use in these locations, is the Britax/Römer Baby Safe Plus ISOFIX.

Note: *Ages given are approximate. In case of doubt, the child's weight not age should be used when considering an appropriate child seat.*

Note: *The information contained in the table may not be applicable to all countries. If you are in any doubt regarding the type and fitment of child seats seek advice from your Dealer/Authorised Repairer.*

Note: *ISOFIX anchorages are provided for the rear, second row outer seating positions. ISOFIX child restraints should be securely attached following the manufacturers instructions at these locations only.*

Note: *A tether anchorage is provided for the rear, second row centre seat position. Do not use this anchor position with an ISOFIX child seat.*

INSTALLING TETHER ANCHORAGE CHILD RESTRAINTS

⚠ **Child restraint anchorages are designed to withstand only those loads imposed by correctly fitted child restraints. Under no circumstances are they to be used for adult seat belts, harnesses or for attaching other items or equipment to the vehicle.**

⚠ **Always follow the child seat or restraint system manufacturer's instructions when fitting tether straps.**

⚠ **When fitting a child seat or restraint system, always pass the tether strap over the top of the seat back and beneath the head restraint.**

⚠ **If a child seat or restraint system is to be fitted to the centre seating position, the centre armrest must be in the stowed position (folded into the seat).**

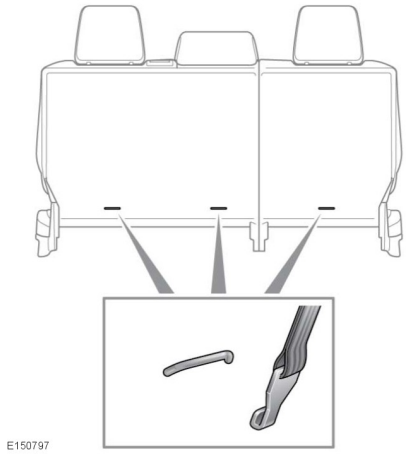

Your vehicle is equipped with anchorage points on the back of the second row seat frames. These should be used to attach straps from child seats or restraint systems.

- Install the child restraint securely in 1 of the rear seating positions.
- Pass the tether strap over the seat back and beneath the head restraint for the outer seat positions.

  Note: *For the centre seat position, pass the tether strap over the fixed head restraint.*
- Attach the tether strap hook to the tether anchor point on the back of the seat. Ensure that the tether strap hook is facing the correct way (see illustration).
- Tighten the tether strap according to the child restraint manufacturer's instructions.

BOOSTER SEATS

In a situation where a child is too large to fit into a child safety seat but is still too small to safely use just the 3 point belt, a booster seat is recommended for maximum safety. Follow the manufacturer's instructions for fitting and use, then adjust the seat belt to suit. See **35, CHILD SEAT POSITIONING**.

The vehicle head restraint may need to be removed to accommodate all adjustments of the child restraint. See **25, HEAD RESTRAINT REMOVAL**.

AIRBAGS

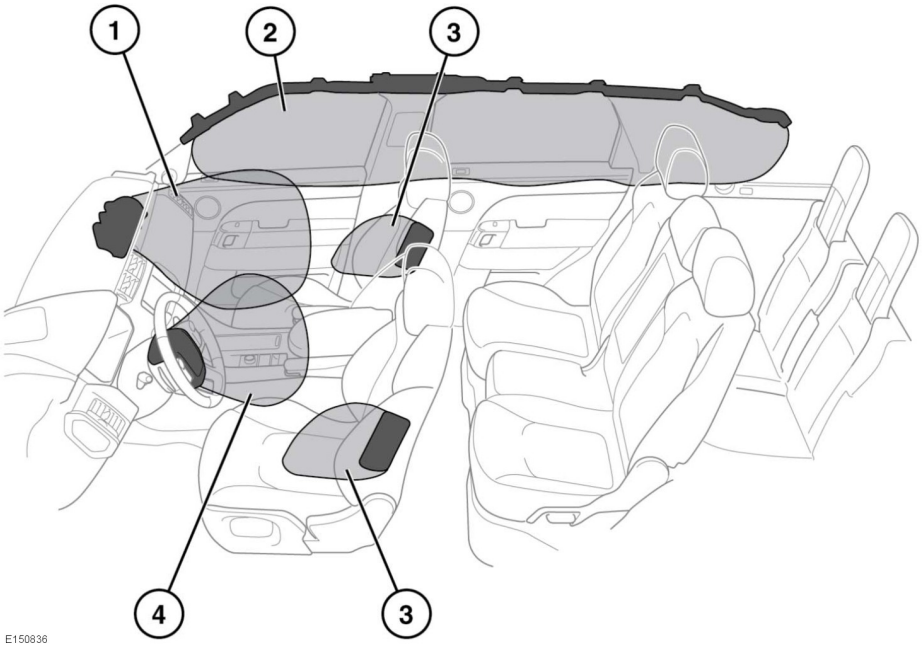

1. Passenger front airbag.
2. Curtain airbag.
3. Side airbags.
4. Driver's front airbag.

Note: *The general location of airbags fitted to the vehicle are marked by the word AIRBAG.*

Always contact your Dealer/Authorised Repairer if:

- An airbag inflates.
- The front or sides of the vehicle are damaged.
- Any part of the airbag system shows signs of cracking or damage, including trim covering airbags.

AIRBAG OPERATION

For the airbags to operate correctly the roof lining and door post trims must be in good condition, correctly fitted, and free from obstruction. Any damage, wear, or incorrect fitment should be referred to your Dealer/ Authorised Repairer as soon as possible for examination and repair.

Do not allow passengers to obstruct the operation of the airbags by placing any part of their person, or any objects, in contact with, or close to, an airbag module. Only use approved accessories (e.g. seat covers).

Make sure a gap is maintained between the side of the vehicle, and the head and torso. This will enable unobstructed inflation of the curtain, and seat mounted side airbags.

Airbags inflate at high speeds. To minimise the risk of injury, make sure all vehicle occupants wear correctly positioned seat belts, sit correctly in the seats, and position the seats as far back as practical.

Airbag inflation takes place instantaneously, and cannot protect against the effects of secondary impacts. Under these circumstances the only protection will be provided by a correctly worn seat belt.

Phone systems should only be installed by qualified persons familiar with the operation of, and requirements for, vehicles fitted with SRS. If you are in any doubt, seek advice from your Dealer/Authorised repairer.

Airbag deployment is dependent on the rate at which the passenger compartment changes velocity during a collision. Circumstances affecting different collisions (vehicle speed, angle of impact, type and size of object hit, etc.), vary considerably and will affect the rate of deceleration accordingly.

Airbags cannot deploy correctly if they are obstructed. Examples of obstructions are:

- Any part of an occupants body in contact with, or close to, an airbag cover.
- Objects placed on, or close to, an airbag cover.
- Clothing, sun screens, or other material hanging from grab handles.
- Clothing, cushions, or other material, covering seat mounted airbags.
- Seat covers which are not approved by Land Rover, or specifically designed for use with seat mounted airbags.

This list is not exhaustive, and it remains the responsibility of the driver and passengers to make sure the airbags are not obstructed in any way.

The airbags and SRS are not designed to operate as a result of:

- Rear impacts.
- Minor front impacts.
- Minor side impacts.
- Heavy braking.
- Driving over bumps and pot holes.

High speed impacts may cause serious injury or death irrespective of safety features fitted to a vehicle.

The airbags and SRS cannot provide protection in some types of impact. Under these circumstances the only protection will be provided by a correctly worn seat belt.

Airbags

FRONT AIRBAGS

The front passenger and driver airbags have 2 levels of deployment, depending on the severity of the frontal impact. In a severe impact, the air bags inflate fully to offer maximum protection. In a lesser impact, full deployment is not required, so the airbags are inflated to a reduced pressure.

SIDE AND CURTAIN AIRBAGS

The seat mounted side airbags are designed to protect the thorax region of the torso and will deploy only in the event of a side impact and then, only on the side of the impact.

Both sides will deploy in the event of a rollover.

The curtain airbags are deployed in side impact and rollover events, providing greater protection from serious head injuries. They deflate at a slower rate than the front or side air bags.

AIRBAG DEPLOYMENT EFFECTS

When an airbag inflates, a fine powder is released. This is normal and not an indication of a malfunction. The powder may cause irritation to the skin and should be thoroughly flushed from eyes and any cuts or abrasions.

Airbag deployment is accompanied by a very loud noise which may cause discomfort and temporary loss of hearing.

Airbags inflate at high speed and can cause injuries. To minimise the risk of injury, make sure all occupants wear correctly positioned seat belts, sit correctly in the seats and position the seats as far back as is practicable.

After inflation, some airbag components will be very hot. Do not touch the airbag components until they have cooled sufficiently.

AIRBAG WARNING LAMP

If the warning lamp indicates that a fault is present in the system, do not use a child restraint on the front passenger seat.

If any of the following warning lamp conditions occur, the vehicle should be checked by your Dealer/Authorised Repairer immediately.

- The warning lamp fails to illuminate when the ignition is turned on.
- The warning lamp fails to extinguish after 8 seconds of the ignition being turned on.
- The warning lamp illuminates at any time, other than the bulb check, when the ignition is turned on.

When the ignition is switched on, a diagnostic control unit monitors the readiness of the system's electrical circuits. The elements of the Supplementary Restraint System (SRS) being monitored include:

- SRS warning indicator.
- Rotary coupler.
- Airbag modules.
- Seat belt pre-tensioners (front and 2nd row rear seat belts).
- Front seat belt buckle switches.
- Airbag diagnostic control unit.
- Crash and rollover sensors.
- Airbag wiring harnesses.

DISABLING THE PASSENGER AIRBAG

Note: *Disabling the passenger airbag is market dependent.*

The passenger front airbag can be switched on and off using the interactive controls on the Instrument panel when the vehicle is stationary. See **46, INSTRUMENT PANEL MENU**

The passenger airbag should be disabled only when a child restraint is fitted to the front passenger seat.

Crash test data and statistics show that the safest place for a child to be restrained is in a child seat correctly fitted to the vehicle's rear seat.

Do not use a child restraint on a seat protected by an operational airbag in front of it. Doing so presents a high risk of death or serious injury to the child in the event of an accident.

Select **Passenger Airbag** from the **Vehicle Setup** menu, located in the **Main Menu**.

The displayed text and diagram will show the current **Passenger Airbag On** or **Off** status. Select **Change Setting** to choose either **On** or **Off**.

A warning lamp in the roof console will illuminate if **Passenger Airbag Off** setting is selected.

Note: *The Instrument panel will also display a warning for 4 seconds every time the ignition is switched on.*

E142744

As soon as the child seat is removed from the front passenger seat, the airbag must be turned on. Failure to do so, will put any front seat passengers at greater risk of death or serious injury in the event of an accident.

When checking the operational status of the front passenger airbag, make sure the ignition is switched on.

Do not fit a child restraint to the front passenger seat if the SRS warning light illuminates continuously with the ignition on.

AIRBAG SERVICE INFORMATION

Do not attempt to service, repair, replace, modify, or tamper with, any part of the SRS. This includes wiring or components in the vicinity of SRS components. Doing so may cause the system to trigger, or render the system inoperative.

Airbags

Do not use any electrical test equipment or devices in the vicinity of SRS components or wiring. Doing so may cause the system to trigger, or render the system inoperative.

All of the following operations should only be carried out by a Dealer/Authorised Repairer, or suitably qualified person:

- Removal or repair of any wiring or component in the vicinity of any SRS components.
- Installation of electrical, or electronic, equipment and accessories.
- Modification to the front or sides of the vehicle exterior.
- Attachment of accessories to the front or sides of the vehicle.

DISABILITY MODIFICATIONS

Occupants with disabilities which may require modification of the vehicle, must contact a Dealer/Authorised Repairer before any modifications are made.

INSTRUMENT PANEL

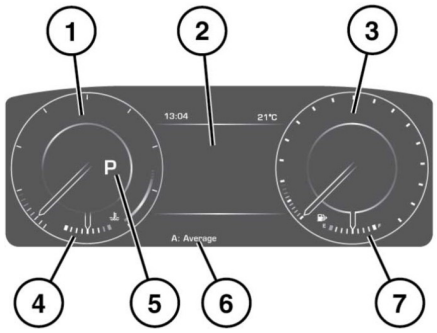

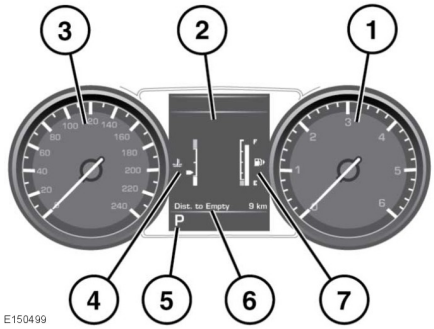

1. Tachometer.
2. Message centre.
3. Speedometer.
4. Temperature gauge.
5. Gear selector position display.
6. Total distance (odometer) and trip recorder.
7. Fuel gauge.
   If the amber low fuel warning lamp illuminates, the vehicle should be refuelled as soon as possible. The approximate distance that can be travelled on the remaining fuel can be viewed via the trip computer Distance to Empty function. See **47, TRIP COMPUTER**.
   As a reminder for the location of the fuel filler, there is an arrow next to the fuel pump symbol pointing to the relevant side of the vehicle.
   If the temperature gauge pointer moves into the red section at the top of the scale, the engine is overheating. Stop the vehicle as soon as safety permits and allow the engine to idle until the temperature reduces. If the temperature does not reduce after several minutes, switch off the engine and allow to cool. If the problem persists, seek qualified assistance immediately.

Never allow the engine to run out of fuel. The resultant misfire can seriously damage the catalytic convertor.

Serious engine damage can occur if the vehicle is driven while the engine is overheating.

Note: *If engine overheating occurs, there may be a noticeable reduction in engine power and the air conditioning may cease operation. This is a normal operating strategy, to reduce load on the engine and assist with cooling.*

INSTRUMENT PANEL MENU

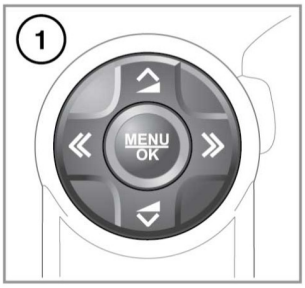

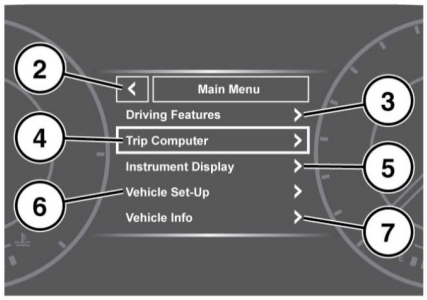

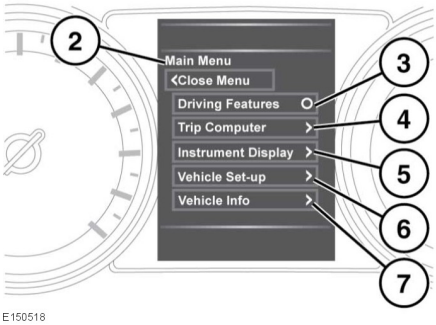

A number of vehicle features and display settings may be configured via the instrument panel menu.

To display and navigate through the instrument panel menu, operate the menu control on the steering wheel.

1. Steering wheel menu control.
2. Close and return to Main Menu.
3. Access the vehicle Driving Features menu.
4. Access the Trip Computer menu.
5. Access the Instrument Display menu.
6. Access the Vehicle Set-Up menu.
7. Access the Vehicle Info menu.

   Note: *Only available before the engine starts.*

Digital Speedometer

A digital speedometer is available in some markets. Depending on market specification, the driver may choose to turn the digital speedometer on or off, or change the units from imperial to metric. The digital speedometer can be accessed through the Digital speedometer option in the instrument panel menu.

WARNING AND INFORMATION MESSAGES

Do not ignore warning messages, take appropriate action as soon as possible. Failure to do so may result in serious damage to the vehicle.

For information regarding the individual messages, their meanings, and any action required, please refer to the relevant section within this handbook.

If more than 1 message is active, each is displayed in turn for 2 seconds in order of priority.

Note: *Messages are displayed in order of importance. High importance warning messages are given the highest priority.*

Warning messages may be accompanied by an audible warning, and the message text may have the handbook symbol next to it. Warning messages are displayed until the condition causing the fault is rectified or the message is suppressed using the **OK** button on the steering wheel. If a message is suppressed, an amber or red warning icon will remain illuminated until the cause of the message is rectified.

TRIP COMPUTER

The computer memory stores data for a journey or series of journeys until it is reset to zero.

There are 3 trip memories available, A, B and Auto. You can specify which trip memory is viewable using the Instrument panel menu.

USING THE TRIP COMPUTER

E150532

The trip computer displays the date and odometer reading. A short press (1 second or less) or a series of short presses of the ¡ button will change the trip computer display. The options available are:

- Trip distance.
- Trip average speed.
- Trip average fuel consumption.
- Instantaneous (short term average) fuel consumption.
- Driving style.
- Range available from remaining fuel.
- Blank display.

To reset the trip computer values to zero, press and hold the **i** button for 2 seconds.

The trip options can be configured using the **Trip content** feature within the **Trip computer** menu.

To reset the fuel consumption value, press and hold the **i** button until the display clears.

The distance, average speed and average fuel economy values for trip A and trip B can be reset. Set the trip computer display to show the trip that you wish to reset, then press and hold the ¡ button until the message **resetting trip** is displayed.

It is not possible to manually reset the Auto trip memory. This resets automatically each time the ignition is switched on.

Trips may be added together, to record a continuous journey, or removed. Press the **i** button for longer than 1 second, when Auto trip memory values for distance, average speed and average fuel economy are displayed, then **adding last journey** or **removing last journey** will appear on the screen. Press the **i** button for longer than 1 second, and the previous trip information will be added to or removed from the current trip and the new total will be displayed. There is no limit to the number of times this can be done before the ignition is switched off.

TRIP DISTANCE

Distance travelled since the last memory reset. The maximum trip reading is 9999.9 (kilometres or miles). The computer will automatically reset to zero if this distance is exceeded.

RANGE

This shows the predicted distance (kilometres or miles) that the vehicle should travel on the remaining fuel, assuming fuel consumption and driving style remain constant.

METRIC/IMPERIAL/MIXED DISPLAY

The trip computer readings can be changed between metric, imperial and mixed units in the **Trip Computer** menu of the Message centre. See **46, INSTRUMENT PANEL MENU**.

Note: *Temperature display can be changed between **°C** (Celsius) and **°F** (Fahrenheit) independently of Metric or Imperial units.*

SERVICE INTERVAL INDICATOR

An upcoming service interval will be notified to the driver via the Message centre, as either a distance or time left until service is due. Once the distance or time are exceeded, the display will show a negative value (-) to indicate that a service is overdue.

One or both types of service interval (distance and time) may be displayed.

WARNING LAMPS AND INDICATORS

RED warning lamps are for primary warnings. A primary warning must be investigated immediately by the driver or qualified assistance before continuing.

AMBER and YELLOW warning lamps are for secondary warnings. Some indicate that a vehicle system is in operation, others indicate that the driver must take action and then seek qualified assistance as soon as possible.

GREEN and BLUE lamps within the instrument panel indicate system status.

LAMP CHECK

A warning lamp bulb check is initiated when the ignition system is switched on and lasts for 3 seconds (except for the airbag warning lamp which will remain on for 6 seconds). If any warning lamp remains on after this period, investigate the cause before driving.

Some warning lamps have associated messages displayed on the Message centre.

Note: *Not all warning lamps are included in the check (e.g. high beam headlamps and direction indicators).*

Note: *If a trailer with LED lights is connected to the trailer socket, the bulb check may not be performed.*

CRITICAL WARNING MESSAGE (RED)

Illuminates when a critical warning message is available in the Message centre.

GENERAL WARNING/INFORMATION MESSAGE (AMBER)

Illuminates when a non-critical warning message or an information message is available in the Message centre.

ENGINE TEMPERATURE (RED)

Illuminates when the engine temperature is too high. The Message centre will also display the message **ENGINE OVERHEATING**.

Stop the vehicle as soon as safety permits and seek qualified assistance before continuing.

LOW OIL PRESSURE (RED)

If the lamp flashes or illuminates while driving, stop the vehicle as soon as safety permits and switch off the engine immediately.

Check and top-up the oil level if necessary. Start the engine, if the lamp remains illuminated, switch the engine off immediately and seek qualified assistance before continuing.

BRAKE (RED)

Illuminates briefly as a bulb check when the ignition is switched on.

If the lamp illuminates while driving, suspect low brake fluid level or a fault with the Electronic Brake Distribution (EBD) system.

Stop the vehicle as soon as safety permits and check and top-up the brake fluid, if necessary. If the lamp remains illuminated, seek qualified assistance before continuing.

Warning lamps

PARKING BRAKE (RED)

Illuminates when the parking brake is correctly applied. If the lamp flashes, a fault has been detected. Seek qualified assistance urgently.

BATTERY CHARGE (RED)

Illuminates as a bulb check when the ignition is switched on and extinguishes when the engine is started.

If the lamp remains on or illuminates while driving, there is a fault with the battery charging system. Seek qualified assistance urgently.

SEAT BELT (RED)

Illuminates, accompanied by a chime, when the vehicle is in motion and an occupied front seat belt is unbuckled.

The lamp will extinguish when the relevant seat belt is buckled.

Note: *Objects on the front passenger seat may activate the seat belt reminder. It is recommended that any objects placed on the front passenger seat are secured using the seat belt. See* ***29, USING THE SEAT BELTS****.*

ENGINE/TRANSMISSION (AMBER)

Illuminates briefly as a bulb check when the ignition is switched on.

If the lamp illuminates when the engine is running, there is an emissions related fault with the engine or transmission. The vehicle can be driven but may enter limp-home mode with the possibility of reduced performance. Seek qualified assistance as soon as possible.

If the warning lamp flashes while the engine is running, reduce speed and seek qualified assistance urgently.

GLOW PLUGS (AMBER)

Illuminates when the ignition is switched on to indicate that the glow plugs are active.

BRAKE (AMBER)

Illuminates briefly as a bulb check when the ignition is switched on.

If the lamp illuminates after starting the engine or while driving, suspect worn brake pads or a fault with the Emergency Brake Assist (EBA) system.

The vehicle can still be driven with care, but seek qualified assistance urgently.

DYNAMIC STABILITY CONTROL (DSC) (AMBER)

Flashes when DSC is active.

If there is a fault, it will remain illuminated and the Message centre will display **DSC NOT AVAILABLE**. The vehicle can still be driven, but without DSC assistance. Seek qualified assistance as soon as possible.

DYNAMIC STABILITY CONTROL (DSC) OFF (AMBER)

Illuminates when DSC is switched off. A chime will sound and a confirmation message will be displayed in the Message centre.

ANTI-LOCK BRAKING SYSTEM (ABS) (AMBER)

Illuminates briefly as a bulb check when the ignition is switched on.

If the lamp remains on or illuminates while driving, there is a fault with the ABS system. Drive with care, avoiding heavy brake application and seek qualified assistance urgently.

AIRBAG (AMBER)

Illuminates as a bulb check when the ignition is switched on and extinguishes when the engine is started.

If the lamp illuminates when driving, there is a fault with the airbag system. Seek qualified assistance as soon as possible.

ADAPTIVE FRONT LIGHTING SYSTEM (AMBER)

Illuminates when there is a system fault. The headlamps will still operate, but without this feature operating correctly. Seek qualified assistance as soon as possible.

REAR FOG LAMP (AMBER)

Illuminates when the rear fog lamps are switched on.

LOW FUEL WARNING (AMBER)

Illuminates when the fuel level is low. Refuel at the earliest opportunity.

The arrow shows which side of the vehicle to locate the fuel filler cap.

AUTOMATIC SPEED LIMITER (AMBER)

Illuminates when Automatic Speed Limiter is active.

FOLLOW MODE (AMBER)

Illuminates when the Adaptive cruise control system is in follow mode.

EXTERNAL TEMPERATURE (AMBER)

Illuminates when the external temperature is low enough that ice may be present on the road.

TYRE PRESSURE MONITORING SYSTEM (YELLOW)

The warning lamp illuminates, accompanied by a message in the Message centre, to warn that 1 or more tyres are significantly under-inflated.

Stop the vehicle as soon as possible, check the tyre pressures and inflate to the recommended pressure.

The lamp will flash to indicate a system fault.

HIGH BEAM (BLUE)

Illuminates when the high beam headlamps are switched on or flashed.

FRONT FOG LAMPS (GREEN)

Illuminates when the front fog lamps are switched on.

Warning lamps

SIDE LAMPS (GREEN)

Illuminates when the side lights are switched on.

HIGH BEAM ASSIST (GREEN)

Illuminates when the auto high beam feature has switched on the high beams.

DIRECTION INDICATORS (GREEN)

The appropriate warning lamp will flash when the direction indicators are operated.

INTELLIGENT STOP/START (GREEN)

Illuminates when the engine is shut down by the Eco Stop/Start system.

Note: *Other warnings normally associated with an engine shutdown, for example the ignition warning lamp, do not illuminate during an engine shutdown by the Eco Stop/Start system.*

GEAR SHIFT (GREEN)

The gear shift indicator illuminates briefly at the recommended gear change point (upshift).

The shift indicator will not illuminate whilst Cruise control is active and not being overridden by pressing the throttle pedal.

Note: *This warning indicator is only a guide. It remains the responsibility of the driver to operate the vehicle in an appropriate manner for the prevailing conditions.*

HILL DESCENT CONTROL (GREEN)

Illuminates continuously when HDC is selected and HDC operating conditions are met. See **135, HDC CONTROLS**.

If the lamp flashes, HDC has been selected, but the operating conditions are not being met or HDC fade-out is occurring.

LOW RANGE (GREEN)

Illuminates when Low range has been selected.

CRUISE CONTROL (GREEN)

Illuminates when cruise control or Adaptive cruise control is active.

FORWARD ALERT (GREEN)

Illuminates when Forward alert is active.

TRAILER DIRECTION INDICATORS (GREEN)

Illuminates as a bulb check when the ignition is switched on and extinguishes when the engine is started.

If a trailer is attached, the warning lamp will flash in conjunction with the direction indicator warning lamp. If the lamp fails to flash, the direction indicator bulb on the trailer may be faulty.

Note: *If a trailer with LED lights is connected to the trailer socket, the bulb check may not be performed.*

LIGHTING CONTROL

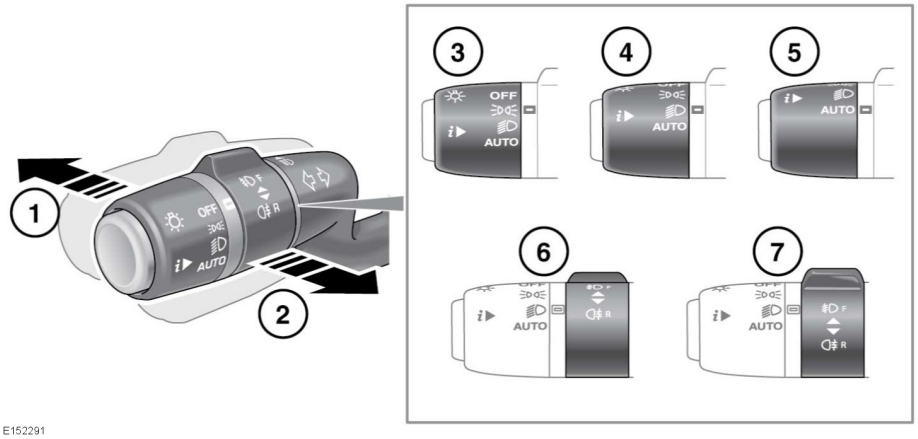

E152291

1. With the headlamps on, push the control away from the steering wheel to select high beam. The warning lamp will illuminate. See **51, HIGH BEAM (BLUE)**.

   Note: *Do not use high beam where it may distract or dazzle other road users.*

2. Pull the control towards the steering wheel and release to flash the high beam on and off. The high beam will remain on for as long as the switch is held.
3. Side lights.
4. Headlamps.
5. **AUTO**. With Auto lamps selected, when ambient light fades and the ignition is on, the side lights, tail lamps, low beam headlamps and licence plate lamps will switch on automatically. Headlamp courtesy delay, High beam assist and Windscreen wiper detection may also be activated.

   Note: *Low ambient light levels, caused by adverse weather conditions, may also cause Auto lamps to activate.*

6. Front fog lamps. Operates only while side lights, headlamps or Auto lamps are selected. Turn the collar away from the steering wheel and release. The warning lamp will illuminate. See **51, FRONT FOG LAMPS (GREEN)**.
7. Rear fog lamps. Operates only while side lights, headlamps or Auto lamps are selected. Turn the collar towards the steering wheel and release. The warning lamp will illuminate. See **51, REAR FOG LAMP (AMBER)**.

DAYTIME RUNNING LAMPS

With the lighting control in the **OFF** position, Daytime running lamps will switch on automatically under the following conditions:

- The engine is running.
- The gear selector is out of park.
- The parking brake is not applied (is released) - market dependent.

Unless required or prohibited by law, daytime running lamps can be disabled or enabled by a Land Rover Dealer/Authorised Repairer.

HEADLAMP COURTESY DELAY

This feature operates whenever the headlamp control is left in the **AUTO** position and the ignition is turned off. The headlamps will remain illuminated for up to 240 seconds.

Note: *The time delay may be changed via the* ***Vehicle Set-Up*** *menu (see* ***46, INSTRUMENT PANEL MENU****).*

HIGH BEAM ASSIST

This feature automatically selects and deselects high beam, under specific conditions of road lighting and in the absence of other vehicle's lights. The system is only active when the ambient light drops below a predetermined level.

Note: *It is not recommended that High beam assist is used while driving off road.*

See **52, HIGH BEAM ASSIST (GREEN)**.

For High beam assist to become operational, the lighting control must be in the **AUTO** position, with low beam headlamps selected. See **53, LIGHTING CONTROL**.

The system will only activate when the vehicle speed exceeds 40 km/h (25 mph). The system will deactivate when vehicle speed drops below 24 km/h (15 mph).

To manually select high beam, move the stalk to the high beam position as normal. To return to High beam assist, move the stalk back to the central position.

To manually override to low beam from high beam, pull the stalk to the flash position and High beam assist will be cancelled. To return to High beam assist, push the stalk to the high beam position and then return it to the central position.

To turn off High beam assist, turn the lighting control from **AUTO** to headlamps on.

This feature can be disabled/enabled using the **Vehicle Set-Up** menu (see **46, INSTRUMENT PANEL MENU**).

The following may affect the operation of High beam assist:

- *Highly reflective road signs.*
- *Dimly lit road users, for example cyclists or pedestrians.*
- *Adverse weather conditions, for example rain or fog.*
- *Dirty or obscured sensor.*
- *Dirty, damaged, or misted windscreen.*
- *Oncoming vehicles partially obscured by a central highway barrier.*

Note: *The system cannot be relied upon to activate or de-activate high beam in all possible circumstances. It remains the driver's responsibility to make sure correct use of the headlamps at all times.*

Note: *Make sure the sensor on the back of the rear view mirror is not blocked or obstructed.*

ADAPTIVE FRONT LIGHTING SYSTEM (AFS)

When cornering using dipped beam, AFS will adjust the headlamp beams to provide improved illumination in the direction of travel.

AFS is deactivated when:-

- Reverse gear is selected.
- The vehicle is stationary.
- Daytime running lamps are on.

If a system fault is detected the headlamps will attempt to move to the central position, and remain stationary. The AFS warning lamp will illuminate to indicate that a fault is present. See **51, ADAPTIVE FRONT LIGHTING SYSTEM (AMBER)**.

HEADLAMPS - DRIVING ABROAD

The headlamps have a beam pattern that eliminates the need to mechanically adjust the lamps or add any external stick-on decals.

To configure the High beam assist system for the side of the road on which you are driving, proceed as follows:

1. Using the menu control on the steering wheel, select **Vehicle set-up** via the Instrument panel menu.
2. Select **High Beam Assist**.
3. Select **Drive on Left** or **Drive on Right**, for the side of the road that you are driving.

HEADLAMPS - CONDENSATION

Misting of lamp lenses can occur under some atmospheric conditions. This will not affect the performance of the lamps and will clear during normal operation.

INTERIOR LIGHTS

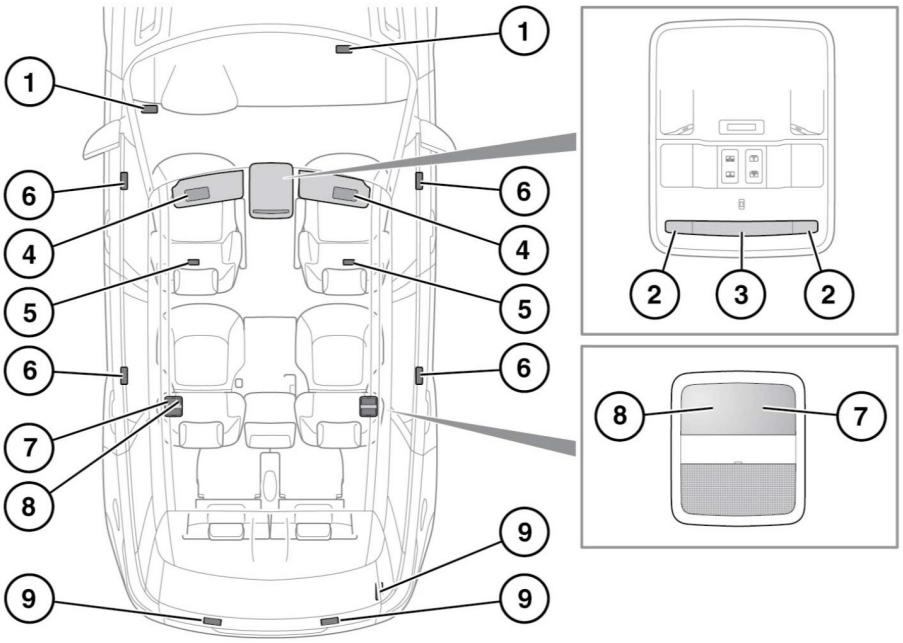

E150831

1. Front seat footwell lamps: Automatically illuminate when the doors are opened.
2. Front reading lamps: Touch the left or right hand side of the sensor lens briefly to switch on/off.

   Note: *To complete the operation, move your finger at least 20 mm (0.8 inches) from the lens.*
3. Front courtesy lamp: Touch the centre of the sensor lens briefly to switch on/off. To switch automatic illumination on/off, touch the centre of the sensor lens until the light flashes, which confirms selection.
   In Auto mode the lamps will illuminate when a door is opened.

   Note: *To complete the operation, move your finger at least 20 mm (0.8 inches) from the lens.*
4. Vanity mirror lamp: Slide the cover open/shut for on/off.
5. Rear seat footwell lamps: Automatically illuminate when the doors are opened.
6. Puddle lamps: Automatically illuminate when the doors are opened.
7. Rear reading lamps: Touch the sensor lens briefly to switch on/off.

   Note: *To complete the operation, move your finger at least 20 mm (0.8 inches) from the lens.*

8. Rear courtesy lamps: Controlled by the settings of the front interior lamp.
9. Loadspace lamps: Automatically illuminate when the tailgate is open. Unless Auto mode is switched off.

INTERIOR LIGHTS INTENSITY

Instrument illumination intensity can be adjusted, while the exterior lamps are turned on. See **298, DRIVER CONTROLS**, Instrument illumination control.

AMBIENT LIGHTING

The LED ambient lighting can be adjusted for colour and intensity via the Touch screen. The exterior lamps must be turned on while changes are being made via the Touch screen. See **74, EXTRA FEATURES**.

STEALTH MODE

Stealth mode lowers the level of interior illumination to aid night time driving. Stealth mode can be enabled though the Touch screen **Extra features** menu. See **74, EXTRA FEATURES**.

Once enabled, Stealth mode is activated by switching the Touch screen off using the on/off button. See **72, TOUCH SCREEN HOME MENU**. If night time conditions exist when the Touch screen is turned off, interior switch illumination, and instrument panel back-lighting will automatically reduce to their minimum light levels. Stealth mode will be deactivated if night time conditions no longer exist, or if the Touch screen is turned back on.

Note: *The interior illumination control will not operate while Stealth mode is active.* *See **298, DRIVER CONTROLS**.*

WIPER OPERATION

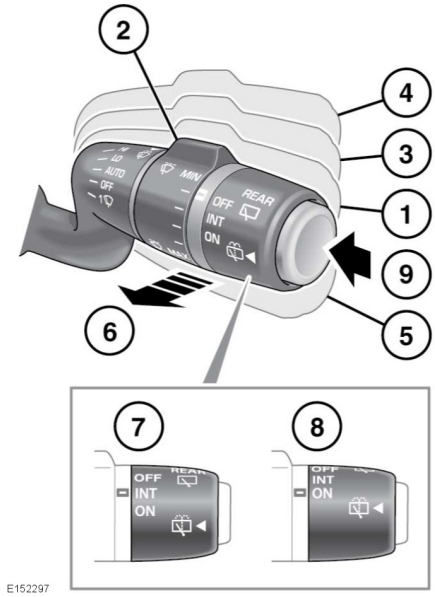

1. Automatic rain sensing mode - The front wipers will respond and adapt automatically to the ambient rain conditions, selecting the appropriate wiper frequency for the prevailing conditions. The sensitivity of the system can be adjusted by rotating the collar (**2**).
2. Rotate the collar to adjust the sensitivity of the automatic rain sensing mode when position (**1**) is selected. The higher the sensitivity position the more responsive the system will become.
   When automatic rain sensing mode is selected, or when sensitivity is increased, the system will perform a single wipe.
3. Low speed continuous wipe.
4. High speed continuous wipe.
5. Single wipe, or hold down for further continuous wipes.
6. Windscreen wash/wipe. Pull and release to operate the front washers and wipers. The wipers will operate for 2 further wipes after the stalk is released. After a few seconds, a drip wipe will clear any residual washer fluid from the windscreen. If more washer fluid is required, pull and hold the stalk position.

   Note: *The front wipers will not operate while the bonnet is open.*
7. INT - Rear wiper intermittent operation. Wiper frequency will increase with vehicle speed.
8. ON - Rear wiper continuous operation.
9. Rear window wash/wipe. Press and release to operate the rear washer and wiper. The wiper will operate in a set cycle to minimise drips when the button is released. If more washer fluid is required, push and hold the button.

   Note: *When reverse gear is selected and the front wipers are operating, the rear wiper will activate.*

   Note: *The rear wiper will not operate while the boot is open.*

Drip wipe on the windscreen can be enabled/disabled by a Dealer/Authorised Repairer.

Rear wiper road speed related frequency can be enabled/disabled by a Dealer/Authorised Repairer.

Do not operate the windscreen wipers on a dry screen.

In freezing or very hot conditions, use the winter park position to allow the wiper blades to be lifted from the screen should they become stuck. See **60, WINTER PARK POSITION**.

Remove any snow, ice or frost from the screen, around the wiper arms and blades and the screen scuttle, before operating the wipers.

Make sure the wipers are switched off before entering a car wash. If the automatic rain sensing system operates during the car washing process, damage may occur to the wiper mechanism.

Note: *If the wipers leave smears on the glass after the car has been washed, this may be due to wax or other residue. Should this occur, clean the glass with washer fluid. If smearing persists, clean the glass with the recommended Land Rover screen cleaning paste. See* ***258, LUBRICANTS AND FLUIDS****.*

Note: *The windscreen will no longer be wiped effectively and the automatic rain sensing function will degrade if the wipers become worn. Always replace worn or damaged wiper blades as soon as possible.*

Note: *If the wiper blades become stuck or jammed, an electronic cut-out will temporarily halt wiper operation. If this happens, switch off the wipers and vehicle ignition, when safe to do so. Clear any obstructions and free the wiper blades before attempting to switch on the ignition.*

The winter park position will move the wipers to allow wiper blade replacement. See **210, WIPERS SERVICE POSITION**.

SPEED-DEPENDENT MODE

Front Wipers

If vehicle speed drops below 8 km/h (5 mph) with the wipers operating, the wipers will switch to the next lowest speed. When vehicle speed increases to over 8 km/h (5 mph), the original wiper speed setting is restored automatically.

This feature can be enabled/disabled by your Dealer/Authorised Repairer.

Rear Wiper

The frequency of the rear wiper, when set to intermittent, increases with vehicle speed.

This feature can be enabled/disabled by your Dealer/Authorised Repairer.

RAIN SENSOR

The rain sensor is mounted on the inside of the windscreen, behind the rear view mirror. The sensor is able to detect the presence and amount of water on the windscreen and automatically activate the windscreen wipers accordingly.

Note: *Static droplets may not be detected on initial start-up. A single wipe should be used to clear the windscreen.*

To activate the rain sensitive wipers, move the wiper stalk to the AUTO position (**1**). The behaviour of the system may be tailored to driver preference by rotating the collar (**2**).

Note: *If the wiper stalk switch is turned to the AUTO position (**1**) the wipers will not operate if either front door is open.*

Note: *In dry and often sunny conditions, optical influences and dirt accumulation on the windscreen may result in the windscreen wipers activating inadvertently. To prevent this, it is recommended that under these conditions the wiper controls are returned to the OFF position.*

HEADLAMP WASHERS

If the headlamps are on, and there is sufficient liquid in the washer reservoir, operating the screen wash will also power-wash the headlamps.

The headlamp power wash will operate on every fifth operation of the screen washer, provided the headlamps are still switched on and approximately 10 minutes have elapsed since the last headlamp wash.

Switching the headlamps or ignition off and back on again, will reset the cycle.

Note: *The headlamp washers are inhibited when the washer fluid reservoir level is low.*

WINTER PARK POSITION

When the vehicle is parked, the wipers can be set to park in a higher position than normal. This allows the wiper blades to be lifted from the screen to limit the effects of freezing, and also to help clear snow. The 'Wipers winter park' option can be selected from the **Vehicle Set-Up** menu. See **46, INSTRUMENT PANEL MENU**.

Do not drive with the wipers in the Winter park position. The wipers should be returned to the normal park position before driving the vehicle.

EXTERIOR MIRRORS

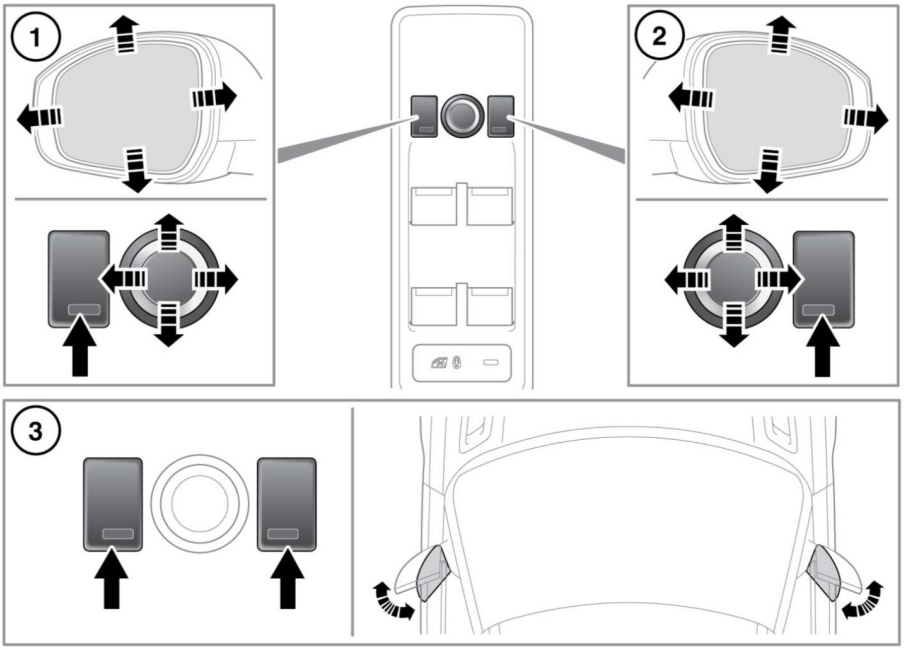

E150833

1. Left mirror adjustment.
2. Right mirror adjustment.
3. Press both switches together to fold/unfold the mirrors.

Note: *If the mirrors are manually folded or knocked into the folded position accidentally, the mirror head will be loose. To re-engage the mechanism, fold, then unfold the mirrors using the switches.*

A thermal cut-out which will temporarily disable the powerfold feature if the switches are operated repeatedly.

Powerfold will only operate if the vehicle is stationary, or travelling at 20 km/h (12 mph) or less.

The mirrors can be adjusted and folded when the ignition is on and for up to 5 minutes after the ignition is switched off, provided the driver's door is not opened.

Press the appropriate button to select the mirror to be adjusted (button indicator illuminates), then use the joystick control to adjust the mirror glass.

The mirrors can be configured by your Dealer/Authorised Repairer to automatically fold when the vehicle is locked, and unfold when it is unlocked.

Note: *If the mirrors were folded using the switches, they will not unfold when the vehicle is unlocked.*

MIRROR DIP WHEN REVERSING

Selecting reverse gear will cause the door mirrors to automatically adjust, providing an improved viewing angle for reversing.

The exact dipped position can be adjusted when the mirrors are dipped. The next time reverse is selected, the newly adjusted position will be selected.

When the gear selector is moved out of reverse, the mirrors will return to their previous position.

Note: *If vehicle speed exceeds 7 km/h (4 mph) in reverse, the mirrors will return to their normal driving position for enhanced visibility.*

The automatic mirror dip feature can be enabled or disabled using the **Vehicle Set-Up** menu. See **46, INSTRUMENT PANEL MENU**.

BLIND SPOT MONITOR

The Blind Spot Monitor (BSM) system is a supplement to, not a replacement for, a safe driving style and correct use of the exterior and rear view mirrors. The system may not function under all speeds, weather and road conditions.

The BSM may not be able to give adequate warning of vehicles approaching very quickly from behind or of vehicles that are being overtaken rapidly.

The BSM may not be able to detect all vehicles and may also detect objects, such as roadside barriers for example. Drive safely at all times and use the exterior and rear view mirrors to avoid accidents.

The BSM uses radar sensors which may be impaired by rain, snow or road spray. This may affect the system's ability to reliably detect a road user within the blind spot.

The driver should not assume that the BSM will correct errors of judgement in driving.

Do not attach stickers or objects to the rear bumpers as these may interfere with the radar sensors.

Note: *Make sure the warning indicators in the exterior mirrors are not obscured by stickers or other objects.*

Note: *The BSM radar sensors are approved in all RTTE countries.*

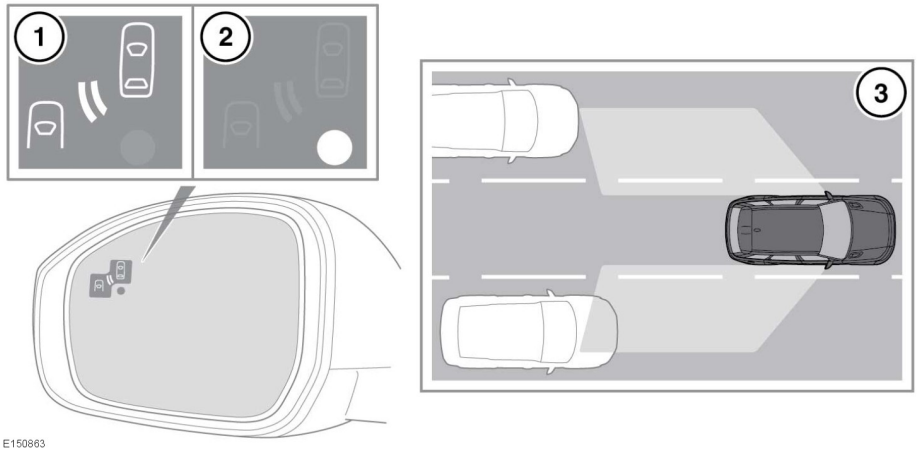

E150863

Blind spot monitoring

The Blind Spot Monitor (BSM) system monitors an area adjacent to your vehicle, that is not easily visible to the driver. The system is designed to identify any road user overtaking your vehicle (**3**) that is within this blind spot, while disregarding other objects which may be stationary or travelling in the opposite direction.

Note: *Refer to the warnings, cautions and notes at the beginning of this section for system limitations.*

If an object is identified by the system as being an overtaking road user, an **amber** warning icon (**1**) illuminates in the relevant exterior mirror This is designed to alert the driver that there is a potential hazard in the vehicle's blind spot and therefore, that a lane change may be dangerous.

The system monitors an area extending from the exterior mirrors rearwards, to approximately 6 metres (20 feet) behind the rear wheels, and up to 2.5 metres (8.2 feet) from the side of the vehicle. This is the width of a typical carriageway lane.

Note: *The system covers an area of a fixed lane width. If the lanes are narrower than a typical carriageway lane, objects travelling in non-adjacent lanes may be detected.*

BSM automatically switches on and becomes active when the vehicle is travelling at more than 10 km/h (6 mph) in a forward gear. When the system initiates, it performs a self-check, during which the warning icons in the mirrors illuminate alternately for a short period of time.

The indicator dot (**2**) remains illuminated until forward vehicle speed exceeds 10 km/h (6 mph).

Note: *BSM is automatically turned off when reverse (**R**) gear is selected, when the vehicle is in park (**P**), or the vehicle is travelling below 5 km/h (3 mph). Under these conditions, an amber warning indicator within the exterior mirror is displayed, provided the vehicle is not fitted with Reverse traffic detection. See **117, REVERSE TRAFFIC DETECTION**.*

BSM is designed to work most effectively when driving on multi-lane carriageways.

BSM can be enabled or disabled through the instrument panel menu. See **46, INSTRUMENT PANEL MENU**.

Note: *If an overtaking vehicle is detected on both sides of the vehicle simultaneously, the warning icons in both mirrors will illuminate.*

Note: *BSM is disabled when a trailer is attached.*

CLOSING VEHICLE SENSING

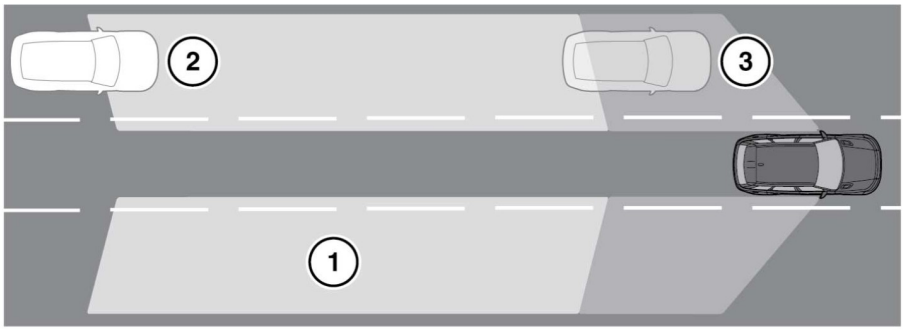

E153796

The closing vehicle detection system is a supplement to, not a replacement for, a safe driving style and use of the exterior and rear-view mirrors.

The radar sensors may be impaired by mud, rain, frost, ice, snow or road spray. This may affect the system's ability to reliably detect an approaching vehicle.

Please note that the closing vehicle detection system may not be able to give adequate warning of vehicles approaching very quickly from directly behind the vehicle. Always use the exterior and rear-view mirrors.

Make sure the warning indicators in the exterior mirrors are not obscured by stickers or other objects.

Do not attach stickers or objects to the rear bumpers, that may interfere with the radar sensors.

In addition to the functionality provided by the Blind Spot Monitor, the closing vehicle detection system monitors a larger area behind the vehicle (**1**). If a vehicle is identified by the system as being a rapidly approaching vehicle (**2**), the amber warning icon will flash in the relevant mirror to indicate that there is a potential hazard and therefore, that a lane change might be dangerous. When the vehicle reaches the area monitored by the Blind Spot Monitor (**3**), the amber warning icon will illuminate continuously.

The radar monitors the area extending from the exterior mirror rearwards, to approximately 70 metres (230 feet) behind the rear wheels, and up to approximately 2.5 metres (8 feet) from the side of the vehicle.

Note: *This radar sensor is approved in all RTTE countries.*

Note: *The system covers an area of a fixed lane width. If the lanes are narrower than a typical carriageway lane, objects travelling in non-adjacent lanes may be detected.*

Note: *If a rapidly overtaking vehicle is detected on both sides of the vehicle simultaneously, the warning icons in both mirrors will flash.*

Note: *The closing vehicle detection system is disabled when a trailer is attached.*

Note: *When BSM is disabled through the instrument panel menu (see* ***46, INSTRUMENT PANEL MENU****) the closing vehicle detection system is also disabled.*

BSM SENSORS

The BSM system will automatically disable if either of the sensors become completely obscured, an amber warning indicator dot (**2**) is displayed in the exterior mirror and the message **BLIND SPOT MONITOR SENSOR BLOCKED** appears in the Message centre.

Note: *Blockage testing is only initiated when vehicle speed is above 10 km/h (6 mph) and will take at least 2 minutes of accumulated driving above this speed, to determine that the sensor is blocked.*

If the sensors become blocked, then please check that there is nothing obscuring the rear bumper and that it is clear from ice, frost and dirt.

If a fault with 1 of the radar sensors is detected, an amber warning indicator dot is displayed in the exterior mirror and the message **BLIND SPOT MONITOR NOT AVAILABLE** is displayed in the Message centre.

Note: *Even if the detected fault only affects the radar sensor on 1 side of the vehicle, the whole system is disabled. If the fault is temporary, the system will operate correctly once the engine has been switched off and then on again.*

If a fault in the system occurs, consult your Dealer/Authorised Repairer.

GARAGE DOOR TRANSCEIVER

Do not use the transceiver with any garage door opener that lacks the safety stop and reverse feature as required by safety standards.

When programming the transceiver to a garage door opener or entry gate, make sure the area is clear. This will prevent potential harm or damage as the gate or garage door will activate during the program.

This device may suffer from interference if operated in the vicinity of a mobile or fixed station transmitter. This interference is likely to affect the hand-held transmitter as well as the in-car transceiver.

The door transceiver is located in the rear-view mirror. It can be programmed to transmit the radio frequencies of up to 3 different transmitters, which can be used to operate garage doors, entry gates, home lighting, security systems or other radio frequency operated devices.

Although this section mainly describes the procedures for a garage door opener, it equally applies to the previously mentioned applications.

In some countries, this feature is also known as the HomeLink® Universal Transceiver.

For further information, see **69, INFORMATION AND ASSISTANCE**.

BEFORE PROGRAMMING

When programming a device that may require you to press and re-press the hand-held transmitter (cycle), unplug the device during the cycling process to prevent possible motor failure.

For best results, fit a new battery to the hand-held transmitter of the garage door opener (or other device) before programming. If your garage door opener receiver (located in the garage) is equipped with an antenna, make sure the antenna is hanging straight down.

PROGRAMMING

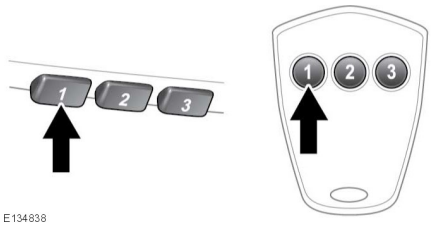

With the engine switched off;

1. Make sure the ignition system is on.
2. Hold the end of the original garage door opener hand-held transmitter 50 to 150 mm (2 to 6 inches) away from the transceiver in the rear-view mirror, keeping the indicator lamp in view.
3. Using both hands, simultaneously press and hold both the chosen transceiver button on the rear-view mirror, as shown above, and the hand-held transmitter button. Keep both buttons pressed. The indicator lamp will flash slowly at first and then change to a fast flash. When the indicator lamp flashes rapidly, release both buttons. The rapid flashing lamp indicates successful programming.

4. If, after 60 seconds, the indicator lamp does not flash rapidly, release both the transceiver and the hand-held transmitter buttons and repeat the procedure starting with Step **2**. Position the hand-held transmitter at a different angle and/or distance.
5. Press and hold the programmed garage door opener button and observe the indicator lamp.
   - If the indicator is continuous, programming is complete and your device should operate when the garage door opener button is pressed and held for approximately 1 to 2 seconds and then released.
   - If the indicator lamp blinks rapidly for 2 seconds and then illuminates continuously, proceed with the following programming instructions for rolling code device equipment.

TO ERASE ALL PROGRAMMING

For first time programming, make sure the engine is switched off:

1. Make sure the ignition is on (but with the engine switched off).
2. Press and hold the 2 outer buttons on the transceiver in the rear-view mirror. Keep the buttons pressed until the indicator lamp begins to flash (this will take approximately 20 seconds), then release the buttons.

All memories in the garage door opener have now been cleared.

Note: *Do not perform this procedure when programming the additional garage door opener buttons.*

ROLLING CODE DEVICE EQUIPMENT PROGRAMMING

Note: *The assistance of a second person, may make the following steps quicker and easier. Once the button has been pressed there are only 30 seconds in which to complete Step **3**.*

1. At the garage door opener receiver (motor head unit) in the garage, locate the learn or smart button/switch.
   - The name of the button or switch may vary between manufacturers.
2. Press and release the learn or smart button.
3. Return to the vehicle and firmly press and hold the programmed garage door opener button for 2 seconds and release.
4. Repeat the press, hold, release sequence 3 times to complete the programming process.

The garage door opener in the rear-view mirror should now activate the rolling code device.

REPROGRAMMING A SINGLE GARAGE DOOR OPENER BUTTON

To programme a device to a previously programmed button:

1. Press and hold the desired pre-programmed garage door opener button for at least 20 seconds, but no longer than 30 seconds, until the indicator lamp begins to flash.
2. Without releasing the rear-view mirror button, position the hand-held transmitter approximately 50 to 150 mm (2 to 6 inches) away from the transceiver in the rear-view mirror, keeping the indicator lamp in view.
3. Carry out Step **3** of **Programming**.

ENTRY GATE PROGRAMMING

The technology of some entry gates requires you to press and re-press (cycle) the hand-held transmitter button every 2 seconds during programming.

Continue to press and hold the desired rear-view mirror button while you cycle your hand-held transmitter until the indicator lamp flashes rapidly.

INFORMATION AND ASSISTANCE

It is recommended that when you sell or dispose of the vehicle, the programmed transceiver buttons be erased for security purposes.

For information on the range of available compatible products or accessories, or for assistance, you should contact your Dealer/ Authorised Repairer.

You can also contact the supplier's helpline on **0 0800 0466 354 65**. This toll-free number can be called from anywhere within Europe. No separate country code is required (the first zero is not required when calling from within Germany).

Contact can also be made via the internet. The website address is www.eurohomelink.com. The e-mail address is: **info@eurohomelink.com**.

Note: *Keep the original transmitter for future use or programming procedures if, for example, you purchase a new vehicle.*

Note: *The manufacturer is not responsible for any radio or TV interference caused by unauthorised modifications to this equipment. Such modifications could void the user's authority to operate the equipment.*

ELECTRIC WINDOWS

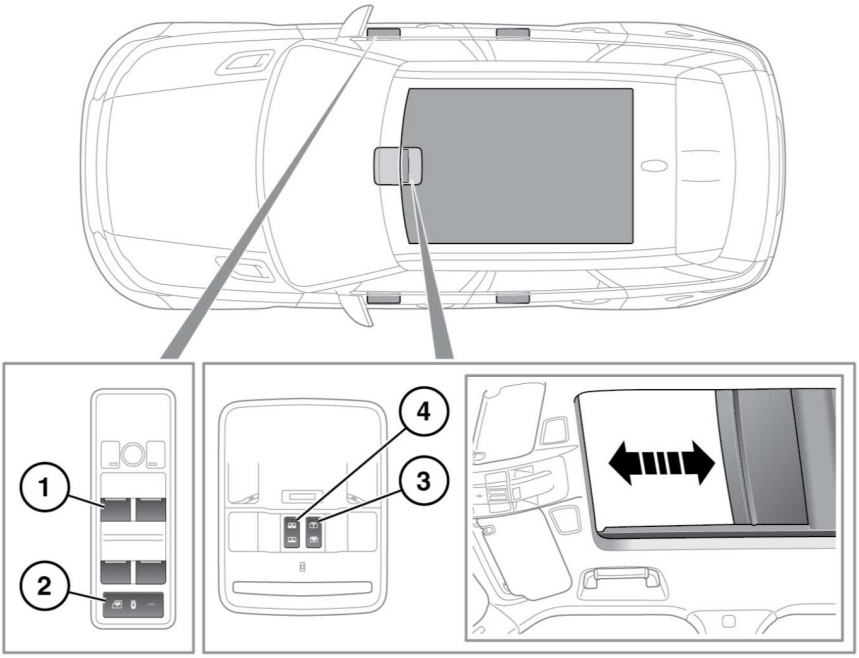

E150832

1. Window switches:
   - To open a window: Press lightly at the front of the switch and release.
   - To close a window: Pull up lightly at the front of the switch and release.
   - One touch open and close; Press or pull firmly at the front of the switch and release.

   Note: *The windows will operate for 5 minutes after the engine is switched off, as long as none of the doors are opened.*
2. Rear window isolator button.

   Note: *This will also isolate rear seat adjustment.*

If children are carried in the rear seats, the isolator switch should be used to prevent operation of the windows. If the windows are operated by young children there is a risk of serious injury or death.

To prevent accidental operation, never leave the Smart key in the vehicle if children or animals are also left in the vehicle.

3. Panoramic roof blind switch:
   - To open the blind: Press lightly at the rear of the switch and release.

- To close the blind: Press lightly at the front of the switch and release.
- One touch open and close; Press firmly at the front or rear of the switch and release.

4. Panoramic roof switch:

Wherever possible, remove any snow, ice, dirt, and leaves etc. from the panoramic roof mechanism before closing. Failure to do so may damage the panoramic roof mechanism.

- Press lightly at the rear of the switch to tilt the roof. Once tilted, lightly press again to open the roof.
- From the fully open position, press lightly at the front of the switch to close to the tilt position and then press lightly again to close fully.
- One touch open and close; Press firmly at the front or rear of the switch and release.

Note: *The panoramic roof will operate for 30 seconds after the ignition is turned off, provided that a front door is not opened.*

ANTI-TRAP PROTECTION

Before closing a window or the sunroof, make sure no occupants have any part of their body in a position where it could be trapped. Even with an anti-trap system death or serious injury could occur.

Anti-trap protection will stop window or sunroof movement if an obstruction or resistance is detected. Check the window or sunroof and its aperture and remove any obstructions (e.g. ice, etc.).

If it is still necessary to raise the window or close the sunroof, the override procedure is as follows:

1. Attempt to close the window/sunroof, anti-trap will prevent closure and lower the window/open the sunroof slightly.

2. Within ten seconds attempt to raise the window/close the sunroof again, anti-trap will prevent closure and lower the window/open the sunroof slightly.

3. Attempt to close the window/sunroof for a third time, this time hold the switch in the close position. Hold until closed.

Note: *If this procedure fails to remove the blockage, the window operation may need to be reset. See* ***210, WINDOW RESET****.*

Note: *The sunroof anti-trap mechanism works differently and does not require reset if activated. See* ***210, SUNROOF RESET****.*

TOUCH SCREEN HOME MENU

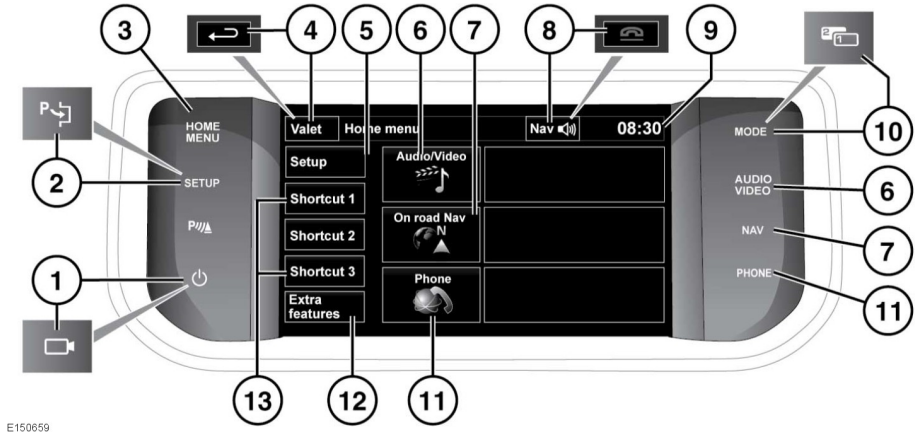

Always run the engine during prolonged use of the Touch screen. Failure to do so may discharge the vehicle battery, preventing the engine from starting

Avoid spilling or splashing liquids onto the Touch screen.

1. Press to turn on/off the screen. When proximity cameras are fitted, this icon is changed and the button will turn cameras on/off.
2. Press to select the Touch screen **Setup** menu. When Park Assist is fitted, this icon is changed and the button should be pressed to activate Park Assist.
3. Press to select the **Home menu**.
4. Touch to select **Valet** mode. During menu mode, the icon is changed to the Back soft key, touch to return to the previous screen displayed
5. Touch to select the Touch screen **Setup** menu.
6. Touch or press to select the **Audio/Video** menu. See **141, AUDIO/VIDEO CONTROLS**.
7. Touch or press to select the **On road Navigation** menu. Current set destination is displayed.
8. While navigation is operating, touch to repeat the last given navigation instruction. During a phone call, the icon is changed. Touch to end the call.
9. Touch to adjust time/date.
10. Touch to scroll through audio/video sources. When Dual view is fitted, this icon is changed and the button should be pressed to access the Dual view screen display.
11. Touch or press to select the **Phone** menu.
12. Press to select the **Extra features** menu.
13. To change the shortcuts. See **73, TOUCH SCREEN SETUP**.

TOUCH SCREEN USE

Always run the engine during prolonged use of the Touch screen. Failure to do so may discharge the vehicle battery, preventing the engine from starting

Avoid spilling or splashing liquids onto the Touch screen.

TOUCH SCREEN CARE

Do not use abrasive cleaners on the touch screen. For approved cleaning products, contact your Dealer/Authorised Repairer.

TOUCH SCREEN SETUP

- Select **Set-up** from the Home menu.

The setup screen is divided into categories:

- Screen
- System
- Voice
- Audio

SCREEN SETTINGS

Volume pop-up: Display Volume pop-up on/off.

Screensaver: Change screensaver.

Time out home: Sub menu selection screens can be set to revert to the **Home** menu after a pre determined length of time.

Theme: Changes appearance of the Touch screen soft keys.

SYSTEM SETTINGS

Button feedback: Select to turn the soft key confirmation tone on/off.

Clock adjust: Select 12 or 24 hour clock. Set current time. Select **Date** to change the date, or to alter the date format. Select **Set**, to store new settings.

Note: *The clock can also be adjusted from the Touch screen time display.*

Home menu shortcuts: Select up to 2 items from the displayed list to appear as shortcuts on the **Home menu**. Select **Clear** to deselect highlighted items.

Language: Select the required language. Select **Male** or **Female** voice. Touch **Change** to select alternatives for Voice and text displays. Follow the on-screen instructions to confirm.

Note: *Some languages are not yet available for both System display text and Voice control. In this event, it will be necessary to select a separate language for Voice control.*

Volume presets: Adjust volume for the available systems (announcements, parking aid, phone, voice etc.).

VOICE SETTINGS

- **Command list**: View the categories and the acceptable voice commands.
  Pressing the **i** soft key next to any command shows alternative ways of saying the same command.
- **Voicetags**: View the categories. Select a category to manage the voicetags for the chosen system. See **73, VOICE SETTINGS**
  .
- **Operating guide**: View brief Voice system instructions. Select **Voice tutorial** for more detailed instructions (cancel via the displayed pop-up or by pressing and holding the voice button).

- **Preferences**: Select to alter the following settings:
  - **Voice profile**: The voice system can be trained to have a greater recognition of a particular voice or accent.The default setting is **Standard**. To build a voice profile for either **User 1** or **User 2**, it is necessary to complete a training program first.

    To complete the training for the first time, select either **User 1** or **User 2** and follow the on-screen and audible instructions.
  - **Voice feedback**: Select **On/Off**.
  - **Feedback volume**: Adjust using the +/- buttons. It is not possible to reduce the volume to zero.
- **Voice training**: Select to access the voice system training program, designed to enable the system to better recognise the vocal characteristics of a user.
  Select **User 1** or **User 2** and follow the on screen and audible instructions. See **169, VOICE TRAINING**.

The training session can be cancelled at any time by touching the on-screen pop-up or by pressing and holding the Voice button on the steering wheel. See **168, USING VOICE CONTROL**.

SELECTING VALET MODE

Valet mode allows the vehicle to be driven and locked by a parking attendant, without giving access to the loadspace and glove box. Valet mode also prevents operation of the Touch screen, to prevent access to telephone numbers or navigation addresses.

Each time Valet mode is used a Personal Identification Number (PIN) must be entered.

1. From the **Home** menu, select **Valet**.
2. Enter a memorable 4 digit PIN. You will be prompted to confirm the PIN. If you wish to cancel the PIN, select **Delete**. If the PIN is cancelled, or incorrectly entered, you will be prompted to enter the PIN again.
3. **Valet mode activated** is displayed to indicate that a PIN has been accepted.

The luggage compartment and glove box are now securely locked in Valet mode and the Valet mode On screen is displayed.

DESELECTING VALET MODE

1. When you re-enter the vehicle, select **Valet.**
2. Enter your memorable 4 digit PIN and touch the **OK** button.

Valet mode deactivated is displayed to indicate that a PIN has been accepted.

- The luggage compartment and glove box will return to the previously set security requirement.
- The Touch screen will be enabled.

Note: *If the PIN is forgotten, Valet mode can only be deactivated by your Dealer/Authorised Repairer.*

EXTRA FEATURES

This menu allows selected extra features to be displayed for adjustment, switching on/off, or for information. An example of this is the ECO-Data feature.

There are more extra features available than can be displayed at any one time, therefore they are displayed in alphabetical order. Use the forward or back soft keys to move to the next screen.

CLIMATE CONTROL

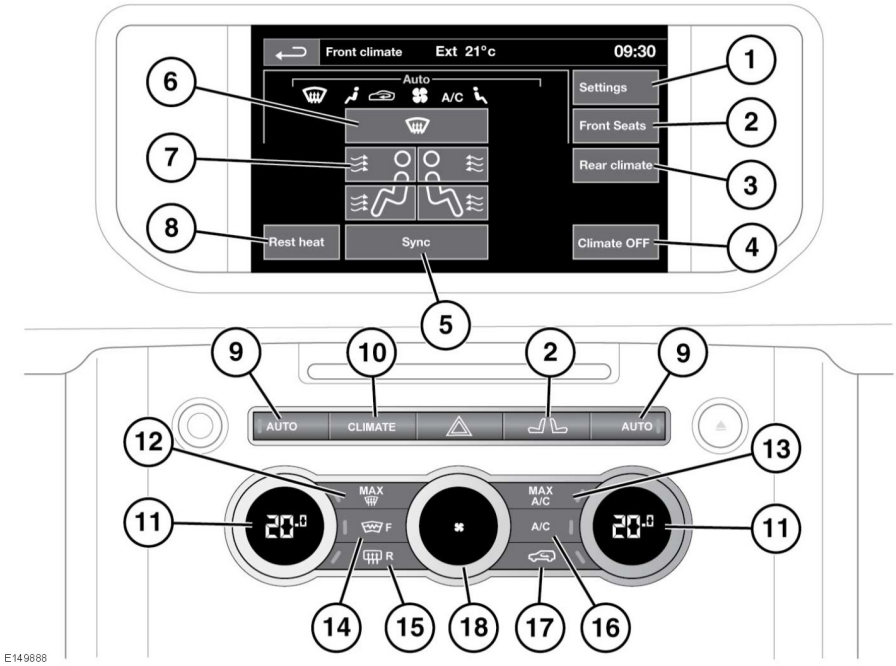

Press the **CLIMATE** hard key to access the climate control Touch screen menu.

1. Climate control settings menu.
2. Front heated/climate seat menu.

   Note: *Heated/climate seats operate only when the engine is running*
3. **Rear climate** menu (if fitted).
4. Climate control system on/off.
5. Synchronises all climate zones to the driver's settings.
6. Distribute air to windscreen.
7. Air distribution.

   Note: *More than 1 setting may be selected at a time to achieve the desired distribution.*
8. **Rest heat**: With the engine switched off, press to operate. While the engine is still warm, it is possible to provide cabin heating, by using the residual heat from the engine. This facility can be selected for up to 15 minutes after the engine is switched off and will operate until the engine cools.

   Note: *Rest heat is only available on vehicles fitted with an auxiliary heater.*
9. **AUTO**. Press to automatically maintain the cabin comfort based on the selected temperature.
10. **CLIMATE** hard key. Shortcut to the Touch screen climate control menu.
11. Temperature controls. For individual driver/passenger settings.

12. Maximum defrost program.
13. Maximum air conditioning (cooling) program.
14. Heated windscreen. The heated windscreen will activate for a predetermined length of time.
15. Heated rear screen. The heated rear screen will activate for a predetermined length of time.

Do not attach labels to the rear screen. Do not scrape or use abrasive materials to clean the inside of the rear screen.

16. Air conditioning.
17. Air recirculation. Press for timed air recirculation. Press and hold for latched (continuous) air recirculation. To cancel air recirculation, press the button again.

    Note: *Prolonged use at low temperatures may cause the windows to mist.*
18. Blower speed control. In manual mode, the current speed selection is indicated in the integrated screen on the blower speed control. To switch off climate control, rotate fully counter-clockwise, stop and then turn counter-clockwise again.

Note: *An indicator lamp in the switch will illuminate when the function is selected.*

Note: *To help keep the windows clear of ice, close the centre face level vent and direct air flow from the outer face level vents towards the side windows.*

Note: *The climate control system removes moisture from the air and deposits the excess water beneath the vehicle. Puddles may form but this is normal and no cause for concern.*

Timed climate controls the optional auxiliary heater and can be set from the **Extra features** menu. See **77, SETTING A TIME FOR TIMED CLIMATE OPERATION**.

AUTOMATIC RECIRCULATION

If an air quality sensor is fitted, the climate control system will monitor exterior air pollution and select recirculation if it reaches a predetermined level. This feature only operates when selected from the **Settings** menu. Recirculation sensitivity can also be changed in the **Settings** menu. See **76, AIR QUALITY SENSOR**.

Pressing the recirculation button will deactivate automatic recirculation.

AIR QUALITY SENSOR

The sensitivity of the air quality sensor can be adjusted using the Touch screen:

1. Select **Settings** from the **Climate** menu.
2. Touch the low, medium or high soft keys on the Touch screen to select the desired sensitivity.
3. To switch off air quality sensing, touch the off soft key.

The auto recirculation icon appears on the Touch screen when the air quality sensor is switched on.

CLIMATE SEATS

Note: *The heated and/or climate seats will only operate when the engine is running.*

Heated and/or climate seats are controlled from the **Home** or **Climate** menus on the Touch screen or by the CLIMATE or seat menu hard keys.

Note: *The **Front seats** menu will be displayed. If fitted, the **Rear seats** menu is also accessible.*

If fitted, rear heated seats (non-climate) can only be operated using the switches located on the rear of the centre console.

Heated ventilation:

- Touch the up arrow icon to switch heated ventilation on at maximum (3 red bars).
- Touch the down arrow icon once or twice to reduce the ventilation setting (2 and 1 red bars).
- Touch the down arrow a third time to switch off seat ventilation.

Cooled ventilation:

- Touch the down arrow icon to switch cooled ventilation on at maximum (3 blue bars).
- Touch the up arrow icon once or twice to reduce the ventilation setting (2 and 1 blue bars).
- Touch the up arrow a third time to switch off seat ventilation.

Seat zone selection:

- If fitted with climate seats, constant selection of the **Seat zone** soft key will scroll through the 3 choices of seat zone; full seat, cushion, or back rest only.

AUXILIARY HEATER

Your vehicle may be fitted with an auxiliary heater which is powered by fuel drawn from the vehicle's tank. The heater operates at low ambient temperatures. Alternatively, it can be controlled by the Timed climate control system, or from the Timed climate remote control.

When the heater is operating, exhaust fumes from the heater may be visible exiting from under the front of the vehicle. This is normal and is not a cause for concern.

Do not operate the auxiliary heater when refuelling the vehicle. Doing so may cause fuel vapours to combust causing a fire/explosion.

Do not operate the auxiliary heater while the vehicle is in an enclosed space. Doing so can cause a build-up of highly toxic fumes which may cause unconsciousness or death.

TIMED CLIMATE CONTROL

The timed climate control system provides a comfortable temperature inside the cabin in advance of driver and passengers entering. Dependent on the external temperature, the system draws in fresh air to cool the cabin or operates the auxiliary heater to warm it.

The auxiliary heater is also operated to warm the engine and aid starting in very cold conditions.

Note: *If the auxiliary heater is used to warm the engine, the cabin will not be warmed.*

The timed climate control system is controlled by the Touch screen and can be activated/deactivated by the Timed climate remote control.

The system may not operate or will switch off automatically in the following scenarios.

- If the fuel level is low.
- If the vehicle's battery charge is low.
- If the coolant temperature is at or above its required temperature.

SETTING A TIME FOR TIMED CLIMATE OPERATION

The Touch screen can be used to either preset activation times or to operate the system manually.

When the system is operating, the LED in the climate control **AUTO** or **A/C** button will flash. **AUTO** indicates the engine or cabin are being heated. **A/C** indicates the cabin is being ventilated. The choice of operation is automatically determined by the system depending on the external temperature.

Note: *The system will cease operation when the engine is started.*

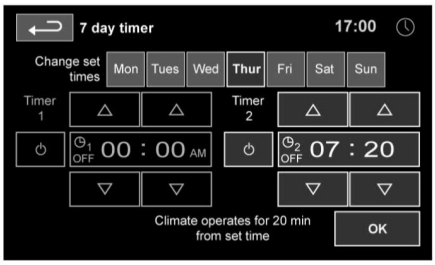

E140084

To set a timed climate program:

1. Press the **HOME MENU** hard key.
2. Touch the **Timed Climate** soft key. This soft key may be set on a personal shortcut or accessed via the **Extra Features** soft key. Select 7 day timer, or single event, then select the timer button. If 7 day timer selected, then select the day for which you want to set a program. Alternatively, select **All Week** to select the same start time for every day.
3. Touch the Timer 1 or Timer 2 icon. The timers can be toggled between on and off using the power soft key.
4. Touch the up or down arrows to set the start time. Hours and minutes are adjusted separately.
5. Touch **OK**. The screen will display the activation time. If required, set the time for the other timer using the same process.
6. Once set, the timer events can be turned on or off as required in the Timed climate screen by selecting the 7 day timer or the single event soft key.

Note: *Set times should to be programmed 20 minutes before the planned journey.*

Note: *The time format, 12/24 hour clock, is determined by the time settings currently selected in the* ***System settings*** *menu. See* ***46, INSTRUMENT PANEL MENU****.*

Note: *Timed climate will only operate once between engine starts. For example, a remote timed climate request will not be performed if a programmed timed climate event has already occurred.*

A current heating cycle will be cancelled if the engine is started. Any programmed heating cycle may be cancelled by touching the relevant power soft key on the timer set up menu or the **Power** soft key on the **Timed Climate** information home menu.

USING THE TIMED CLIMATE REMOTE

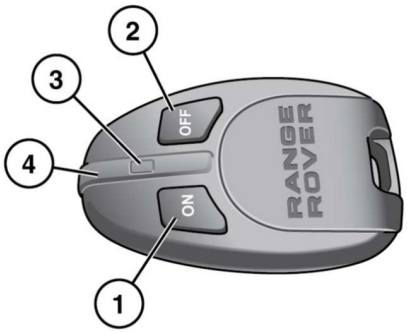

E144900

1. **ON** button.
2. **OFF** button.
3. LED (operation indicator).
4. Antenna.

Note: *Avoid touching the antenna when operating the ON or OFF button.*

The remote control has an approximate range of 100 metres. There is no need to point the remote control at the vehicle.

Press and hold the **ON** button for approximately 2 seconds. The LED will illuminate green to confirm that a remote climate program has been initiated. The LED flashes once every 2 seconds to indicate that the heater is active.

The remote climate program will continue for 20-30 minutes, after which it will switch off automatically to prevent the vehicle battery from discharging. It also turns off automatically if the engine is started.

The LED indicator signals various states and conditions for the remote climate as follows:

- Illuminates green when the **ON** button is pressed, then quickly flashes green to indicate that heater operation has been requested.
- Illuminates green followed by red when the **OFF** button is pressed to indicate that the heater has been requested to shut down.
- Illuminates green, then quickly flashes red when either the **ON** or **OFF** button is pressed to indicate that there is no communication with the receiver. This normally occurs if the vehicle is too far away.
- Illuminates green, then slowly flashes red when either the **ON** or **OFF** button is pressed to indicate that there is an error.
- Flashes red when either the **ON** or **OFF** button is pressed to indicate the timer climate remote battery needs replacing.

Note: *The timed Climate remote will only operate once per engine start to maintain battery condition.*

ADDITIONAL REMOTES

Extra remote controls can be programmed to operate the heater. A maximum of 4 remote controls can be programmed to the vehicle. Contact a Dealer/Authorised Repairer to purchase extra remote controls and have them programmed to the vehicle.

REPLACING THE REMOTE BATTERIES

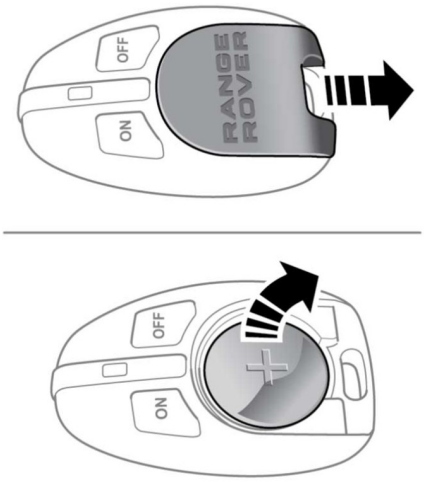

E144902

With the front of the remote control facing upwards, press down on the rear of the access cover and push completely off to reveal the battery compartment. Note that the battery should be inserted with the positive side facing upwards. Remove the old battery and make sure the correct polarity is maintained, insert a new, unused 3 volt CR2032 battery. Align and push the cover back to the original position.

REAR CLIMATE CONTROL

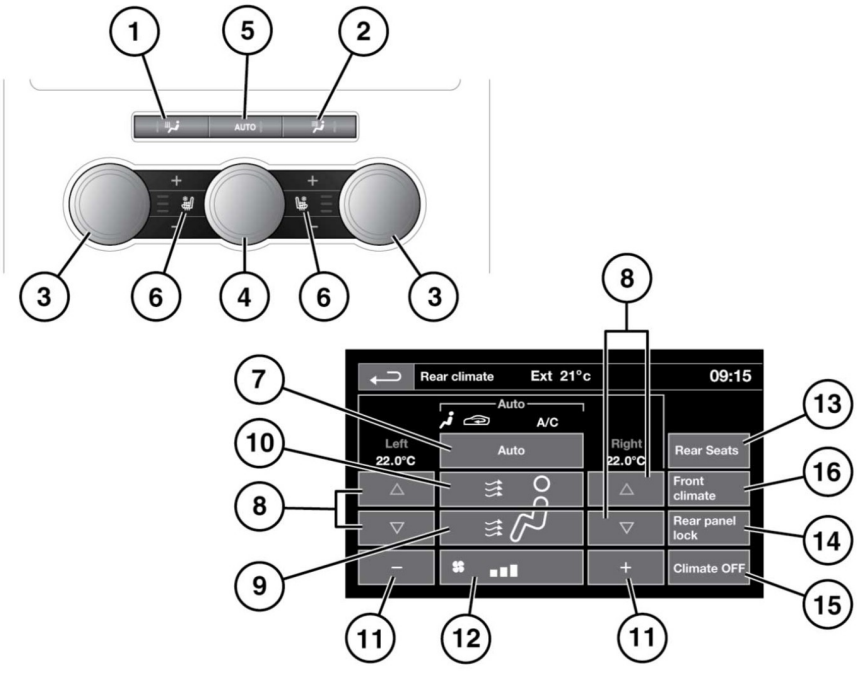

There are 2 types of rear climate control: 3 Zone and 4 Zone. All of the 3 Zone controls will affect the whole of the rear passenger compartment. 4 Zone allows independent control of each side.

To access the rear climate Touch screen menu, select **Rear climate** from the **Front climate** menu.

Note: *When DEFROST is selected at the front, rear control is suspended until the defrost program ends.*

Note: *When the Sync button is selected on the front climate screen the rear zones are controlled by the driver's settings.*

Note: *More than 1 setting at a time may be selected to achieve the desired air distribution.*

1. Press **AUTO** to select full auto mode operation. The system will adjust the heat output, blower speed, air intake and airflow distribution to maintain the selected temperature(s) without further adjustments. The air distribution and blower controls may be operated independently to override auto mode. If you do this, the indicator lamp on the switch will go out. Press again to return to full auto mode operation.
2. Air distribution to face. Press to switch on/off. Switch indicator illuminates when on.
3. Air distribution to feet. Press to switch on/off. Switch indicator illuminates when on.

4. Blower speed control. Rotate to adjust.
5. Temperature controls. Rotate to adjust between 16°C - 28°C (59°F - 83°F). The temperature is displayed on the Touch screen, **Rear climate** menu.
6. Heated/Climate seats temperature controls. Select the upper switch to increase and the lower switch to decrease. The 3 bar light display shows temperature status.
7. Touch to select **AUTO** mode on/off.
8. Temperature controls. Select the red arrow to increase and the blue arrow to decrease. The temperature settings are displayed above the arrows.
9. Air distribution to feet. Touch to switch on/off.
10. Air distribution to face. Touch to switch on/off.
11. Blower speed control. Touch **+** or **-** to adjust blower speed.
12. Blower speed indicator.
13. Touch **Rear seats** to adjust the Heated/Climate seats temperature settings.
14. Touch **Rear panel lock** to disable the rear climate control switches, to prevent the rear passengers from adjusting the rear climate settings. Select again to re-enable the controls.
15. Touch **Climate OFF** to stop air flowing to the rear of the cabin.
16. Touch **Front climate** to open the **Front climate** menu.

In addition to the selectable controls, the rear climate menu displays symbols that indicate the status of heating and ventilation functions.

Note: *If the climate control system is switched off, pressing a rear AUTO button will switch the climate control system on, unlesss disabled by the rear panel lock.*

STORAGE COMPARTMENTS

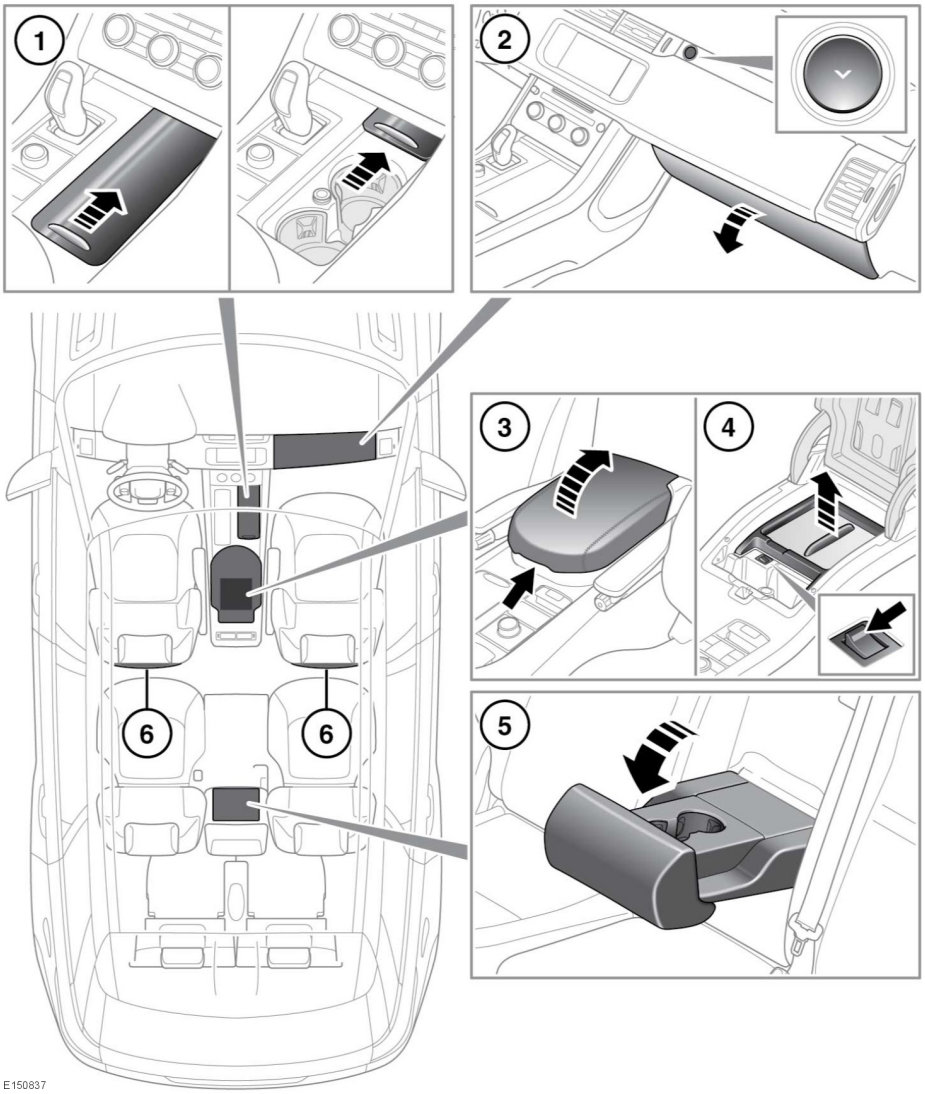

Storage compartments

Make sure any items stored in the vehicle are secure and cannot move. If the vehicle is involved in an accident, or subject to sudden braking or direction change, loose items can cause serious injury.

Do not drink, or use the cup holders when driving.

1. Front cup holders: Slide open the panel to access. Press and release to close.
2. Glovebox.
3. Centre console storage/cool box.

   Note: *The rubber mat at the bottom of the centre console is designed to hold CD cases.*
4. Cool box: Switch on and off using the switch on the inside front lip. There is a short delay between pressing the switch and illumination of the indicator.
   The cool box will work best when the cooling tray is used.

   Note: *The cool box will only operate with the ignition turned on.*

The cool box should be switched off when it is not needed, to preserve battery charge.

5. Rear seat cup holders: Fold the centre armrest down.
6. Map pockets.

AUXILIARY POWER SOCKETS

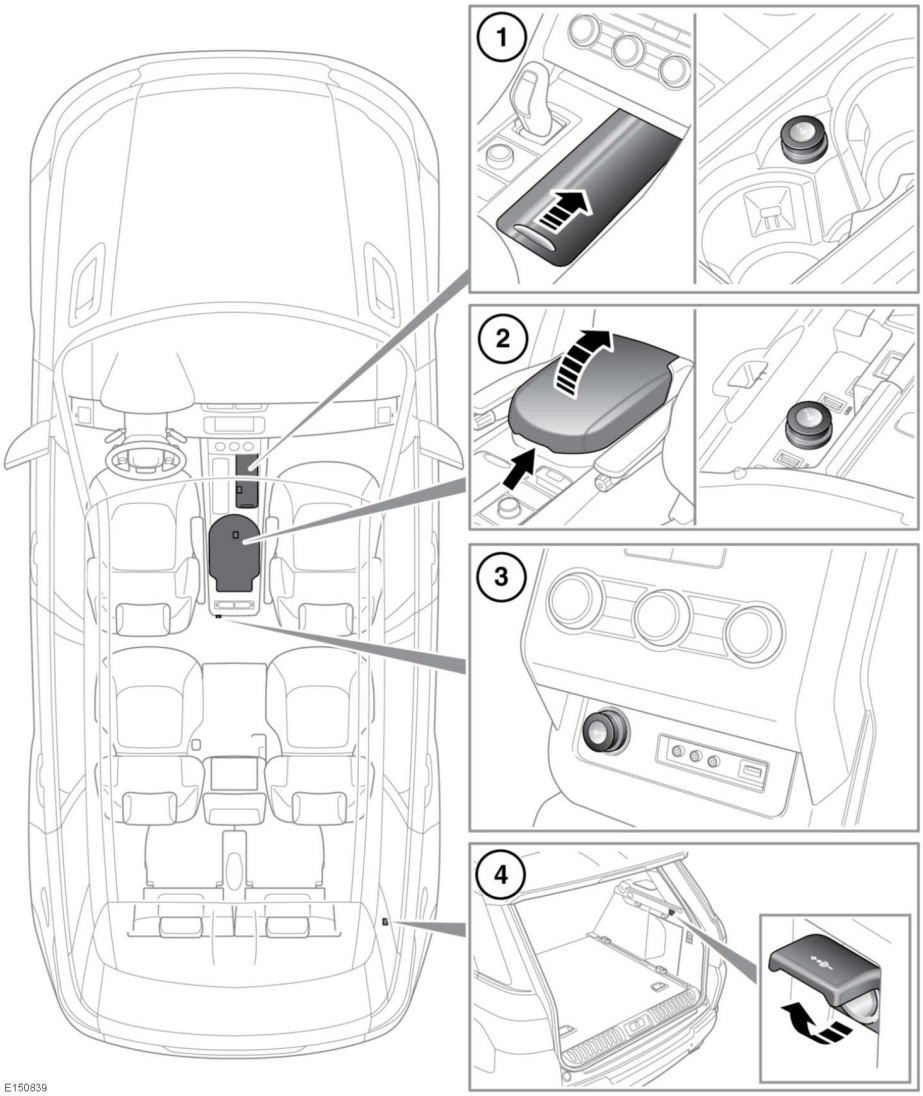

1. Front power socket.
2. Front power socket.
3. Rear power socket.
4. Loadspace power socket.

Only use Land Rover approved accessories. Using any other equipment may damage the vehicle's electrical system. If you are in any doubt contact a Dealer/ Authorised Repairer.

The engine should be running when using accessories for long periods. Failure to do so can discharge the battery.

Note: *Power sockets can be used to power approved accessories that use a maximum of 180 Watts.*

LOADSPACE COVER

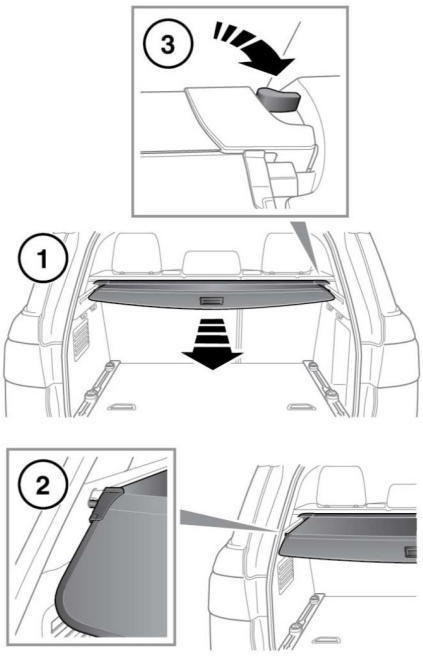

E150871

Do not store the loadspace cover loose in the vehicle. During an accident or sudden manoeuvre, the load space cover could cause serious injury or death.

Never place objects on top of the loadspace cover. During an accident or sudden manoeuver, loose objects can cause serious injury or death.

1. Pull the rigid portion of the cover to unroll.
2. Engage the end pieces into the recessed areas moulded into the loadspace sides. To retract the loadspace cover, disengage the ends from the recessed areas and allow the soft portion of the cover to retract into its housing
3. To remove the cover, turn the release lever to unlock the assembly and disengage the pins from the sockets.

To avoid injury the loadspace cover must not be left in the installed position when the third row seats are occupied.

Remove the stowed loadspace cover before moving the seats.

Do not attempt to raise the second row seats into the upright position, or tip them forward for third row access, while the loadspace cover is stowed behind the second row, as damage will result.

4. To refit the cover, engage the left side of the assembly into the recessed area, then engage the right side, push down into place until a audible click is heard.

LUGGAGE ANCHOR POINTS

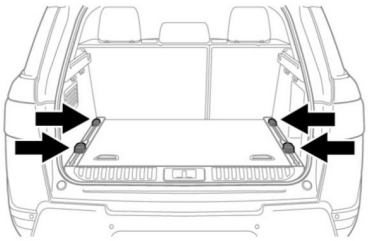

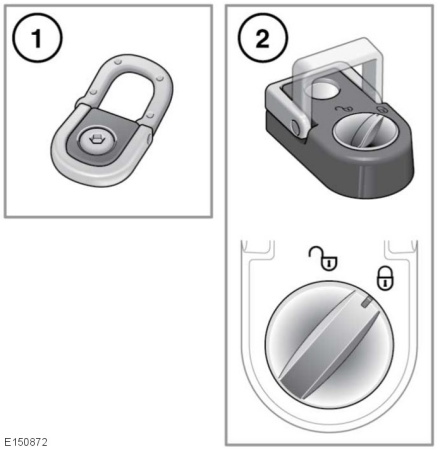

All items carried in the luggage area should be properly secured.

1. To assist in safely securing large items of luggage, four lashing eyes are located in the rear loadspace floor.
2. If adjustable lashing eyes are fitted, first turn the locking button counter clockwise to unlock. Press the button and slide to the required position in the luggage rail. Release the button to latch into position. Move the lashing eye slightly until you hear a click. The lashing eye is now secured. Turn the button clockwise to lock.

Note: *A range of approved luggage retention accessories are available from your Dealer/Authorised Repairer.*

LUGGAGE DIVIDER

A luggage divider kit is provided to assist with safely securing items of luggage to the loadspace floor.

Floor mounted luggage rails provide a full width mounting channel that will accommodate a flexible retracting band or a solid telescopic divider to retain soft and hard luggage of all shapes and sizes.

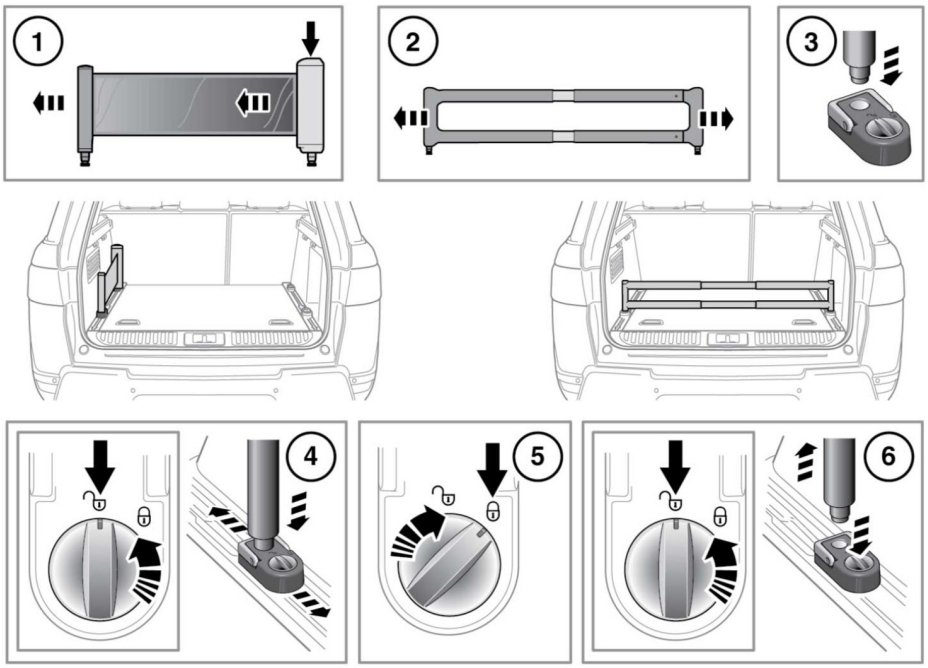

E150873

1. Press then pull the retracting band until the required length is reached.

   Note: *The retracting band should only be used along the side of the loadspace floor, as illustrated.*
2. Adjust the divider to the required length.
3. Unlock the appropriate lashing eye and attach the retracting band/divider.
4. With the lashing eye in the unlocked position, press the button and slide to the required position in the luggage rail.
5. Lock the lashing eye in the required position.
6. To remove the retracting band/divider from lashing eye, unlock lashing eye and press the lock/unlock button to release.

TOWING WEIGHTS

See **261, WEIGHTS**, for details of the Gross Vehicle Weight (GVW), Gross Train Weight (GTW), axle weights and maximum payload.

Maximum permissible trailer and tow ball weights - kg (lb)	
Unbraked trailer weight	750 (1653)
Tow ball nose weight for unbraked trailer	150 (331)
Trailer weight with overrun brakes	3500 (7716)
Tow ball nose weight for trailer with overrun brakes[1]	250 (551)
Tow ball nose weight for powered tow bar[2]	200 (441)
Tow ball mounted accessories weight (e.g. bicycle rack)	80 (176)

Note: *[1] When towing in the European Union (EU), the maximum Gross Vehicle Weight (GVW) can be increased by up to 100 kg (220 lb) provided that vehicle road speed is limited to 100 km/h (60 mph). In this case, the nose weight is 150 kg (331 lb) when the vehicle is in its fully laden condition.*

Note: *When towing outside the European Union, always make sure that GVW and maximum rear axle limits are not exceeded when applying the nose weight.*

*See **261, WEIGHTS** , for details of the GVW, Gross train weight, axle weights and maximum payload.*

Note: *When towing off-road, the powered tow bar option is limited to a trailer weight of 1000 kg (2200lb).*

Note: *When calculating rear axle loading, remember that the tow ball nose weight, the load in the vehicle's luggage area, weight on the roof rack, and the weight of rear seat passengers must all be considered.*

Note: *[2] This restriction applies solely to trailers with overrun brakes. For the powered tow bar option, a restricted weight of 200 kg (441 lb) applies. The vehicle payload MUST be reduced to make sure GVW and maximum rear axle limits are not exceeded when applying the nose weight.*

For all other towing systems, the nose weight can be increased to 250 kg (551 lb). In this case, the vehicle payload MUST be reduced to make sure that GVW and maximum rear axle limits are not exceeded when applying this nose weight.

Note: *The powered tow bar option is limited to 1000 kg (2200 lb) for off-road use.*

Australia only: Nose weight must be a minimum of 7% of gross caravan/trailer weight, up to a maximum of 350 kg (771 lb).

TRAILER ELECTRICAL CONNECTION

Connect only approved electrical circuits, which are in good condition, to the trailer electrical socket.

See **52, TRAILER DIRECTION INDICATORS (GREEN)**, for details of the trailer warning lamp.

Land Rover approved trailer electrical connectors will disable the automatic off-road height selections requested by the Terrain response.

TOWING A TRAILER

It is the driver's responsibility to make sure that the towing vehicle and trailer are being used correctly and in accordance with the manufacturer's recommendations and applicable legislation.

Never exceed any of the following weights; GVW, maximum rear axle weight, maximum trailer weight, maximum permissible nose load and maximum towing equipment nose load. Doing so can cause accelerated wear and damage to the vehicle. It can also adversely affect vehicle stability and braking which in turn can lead to loss of control and increased braking distance, resulting in a rollover or crash.

To preserve handling and stability, only fit Land Rover approved towing accessories.

Never use towing eyes or lashing points to tow a trailer. They have not been designed for this purpose and doing so may cause them to fail, resulting in injury or death.

When towing, do not exceed 100 km/h (60 mph), or 80 km/h (50 mph) if the temporary spare wheel is in use.

To avoid overheating the gearbox, it is not advisable to tow heavy trailer loads at speeds of less than 32 km/h (21 mph) in High range. Select Low range instead.

When towing a trailer over 2,000 kg (4,400 lb), a smoother start can be achieved by moving off in Low range then changing to High range while on the move. See **104, RANGE CHANGING ON THE MOVE**

The use of weight distribution hitches are not recommended.

TRAILER STABILITY ASSIST (TSA)

Note: *This feature may not operate with all trailer designs.*

Trailer Stability Assist (TSA) will not operate in the event of the trailer jack-knifing.

The ability of the system may be reduced when travelling on slippery surfaces.

TSA is an automatic feature to assist the stability of a trailer when towing. If trailer sway is detected, engine power will be gradually reduced and the brakes applied to help regain control.

Note: *TSA will not operate when DSC is switched off.*

ESSENTIAL TOWING CHECKS

Do not loop the breakaway cable over the tow ball, as it may slide off.

Do not exceed the Gross Vehicle Weight (GVW), maximum rear-axle weight, maximum trailer weight or nose weight. Exceeding any of these limits could cause instability and a loss of control.

- When calculating the laden weight of the trailer, remember to include the weight of the trailer, plus the weight of the load. See **261, WEIGHTS**.

- If the load can be divided between the vehicle and trailer, loading more weight into the vehicle will generally improve stability. Do not exceed the vehicle's weight limits.
- For maximum stability make sure that loads are properly secured and unable to shift position during transit. Also, position loads so that most of the weight is placed close to the floor and where possible, immediately above or close to the trailer axle(s).
- To maintain vehicle stability, it is essential that a twin-axle trailer is loaded so that it remains parallel to the ground.
- Increase the tyre pressures of the towing vehicle to those for maximum GVW conditions. See**263, WHEEL AND TYRE SIZES**
- Make sure trailer tyre pressures are set to trailer manufacturer's recommendations.
- Make sure that a suitable breakaway cable and/or safety chains are used. Refer to the trailer manufacturer's instructions for guidance.
- Make sure that the tow ball is secure.
- Check the operation of all of the trailer lights.
- The nose weight must be a minimum of 4% of the gross caravan/trailer weight.

Hitch height must be set with the engine running, so that the caravan/trailer is level when connected to the vehicle.

Note: *All of the doors must remain closed when hitching a trailer.*

POWERED TOW BAR

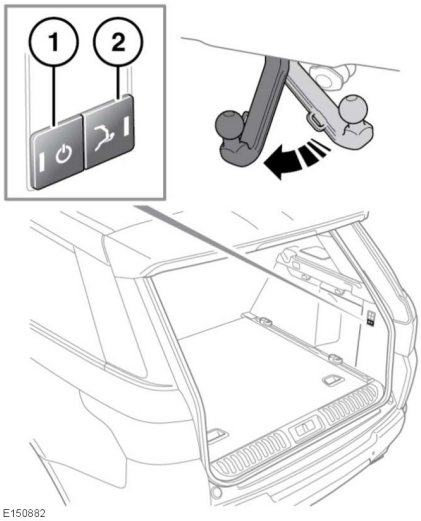

The powered tow bar is hidden in its stowed position behind the bumper. It can be deployed using the buttons located on the right side of the loadspace.

Before activating the powered tow bar, the ignition must be switched off. Always check for obstructions to the tow bar.

Make sure the powered tow bar is fully deployed before connecting a trailer/caravan.

Note: *Do not use a cover or cap on the powered tow bar ball.*

1. Press the tow bar on/off button (**1**). The green LED will illuminate on the deploy/stow button (**2**) for 5 seconds.
2. Press and release the deploy/stow button (**2**). The tow bar will move into position.

Towing

During deployment of the powered tow bar, a series of long warning tones will sound and the green LED will flash. A double warning tone will sound to confirm full deployment and all LEDs will extinguish.

To stow the powered tow bar, repeat the above procedure using the tow bar on/off button (**1**) and deploy/stow button (**2**).

The powered tow bar must be returned to the fully stowed position when not in use.

Note: *To stop movement of the powered tow bar, press either button.*

Note: *During deployment of the powered tow bar, if an obstruction/stall occurs, the green LED will flash and a 10 second warning tone will sound. Press the deploy/stow button while the green LED is flashing to reverse movement of the powered tow bar.*

Note: *If there is debris on the mechanism (e.g. ice), press and hold the deploy/stow button to increase power output to the motor.*

Note: *If the powered tow bar doesn't move or is impacted but not damaged, it may need to be reset. In cases of damage refer to your Dealer/Authorised Repairer.*

Powered tow bar reset

Note: *Before attempting a reset procedure, check the powered tow bar for damage. If the powered tow bar is damaged, contact your Dealer/Authorised Repairer.*

LED's mounted in the deploy/stow button and the on/off button are used to show the condition of the powered tow bar system. Both button LED's flashing indicate the system needs to be reset. If only the on/off button is flashing, a system error has been detected.

If the system needs to be reset, movement of the powered tow bar will stop unexpectedly in either the partially deployed or stowed position. This will be accompanied by a continuous warning tone. To reset the powered tow bar, carry out the following steps:

1. Start the engine and run for longer than 2 seconds. Stop the engine and switch the ignition off.
2. Switch the ignition on, then off.
3. Press and hold button **1** until the green LED illuminates on button **2**. This should take approximately 2 seconds.
4. Press and hold button **2** until the tow bar has reached its fully deployed position. This should take about 10 seconds. A double warning tone will indicate that the tow bar has reached the fully deployed position.
5. Release button **2**. The powered tow bar is now reset.

If the system has detected an error, a continuous warning tone will sound. To clear the system error, carry out the following steps:

1. Press and hold button **1** for more than 1 second.
2. If the error has been cleared, press and hold button **2** for more than 1 second to move the powered tow bar to the fully stowed, or fully deployed position.
3. If the system error is not cleared, contact your Dealer/Authorised Repairer.

If for any reason the procedures are unsuccessful, for example the process was interrupted, repeat the procedure from the beginning. If problems persist, contact your Dealer/Authorised Repairer.

FITTING THE MULTI-HEIGHT DROP PLATE TOW BALL

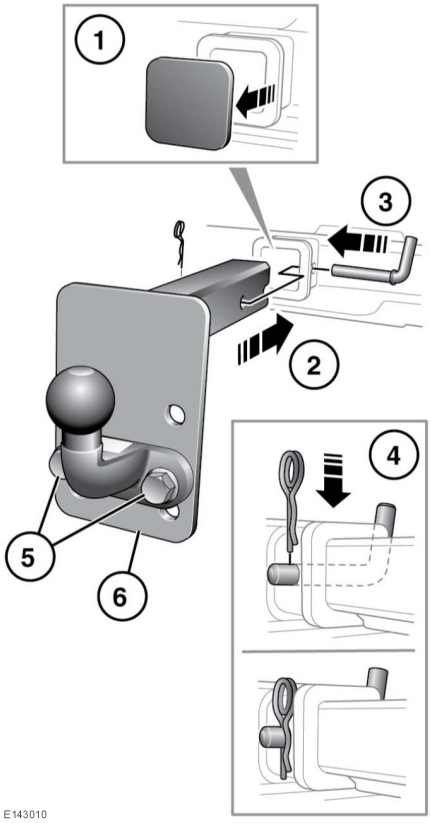

The tow ball/draw bar is heavy, care must be taken when handling it.

Never leave the tow bar loose in the vehicle. It could become a projectile in the event of heavy braking or an accident.

1. The drop plate tow bar is stored in a bag and should be strapped to an anchorage point in the rear stowage area. Remove the plastic cover from the tow bar mounting and stow safely.
2. Insert the tow bar assembly into the receiver.
3. Insert the securing bar.
4. Insert the straight part of the securing pin into the securing bar and push down firmly. Make sure the pin is locked in position.
5. If the tow ball/hitch height is adjustable, remove the fixing bolts.
6. Move the tow ball/hitch to an alternative position on the drop plate and refit the bolts. Tighten to 170 Nm.

TOW BALL AND MOUNTING POINT DIMENSIONS (Multi-height drop plate)

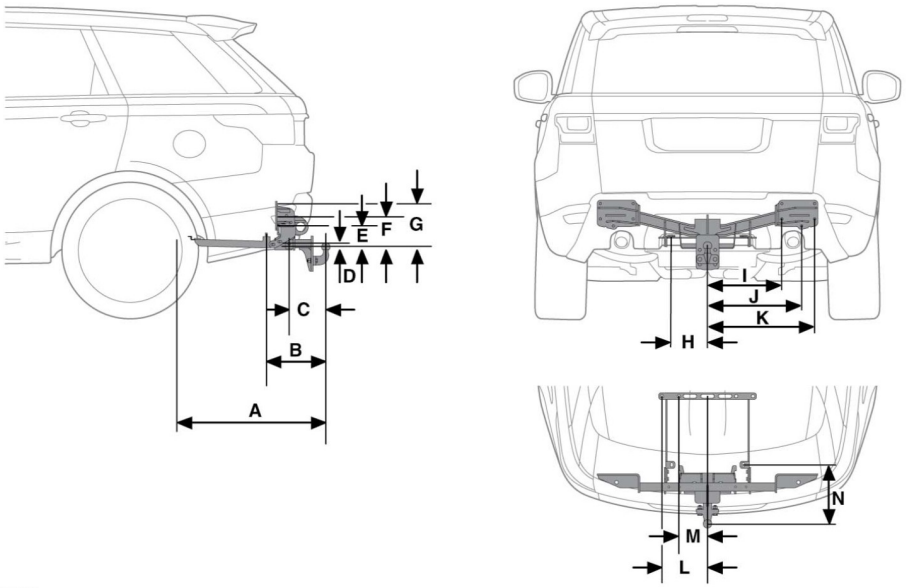

E150884

Dimension	Metric (mm)	Imperial (in.)
A	759	30
B	351	13.8
C	217	8.5
D	23	0.9
E	119	4.7
F	161	6.3
G	252	9.9
H	213	8.4
I	442	17.4
J	560	22
K	637	25
L	270	10.6

Dimension	Metric (mm)	Imperial (in.)
M	170	6.7
N	351	13.8

TOW BALL AND MOUNTING POINT DIMENSIONS (Powered tow bar)

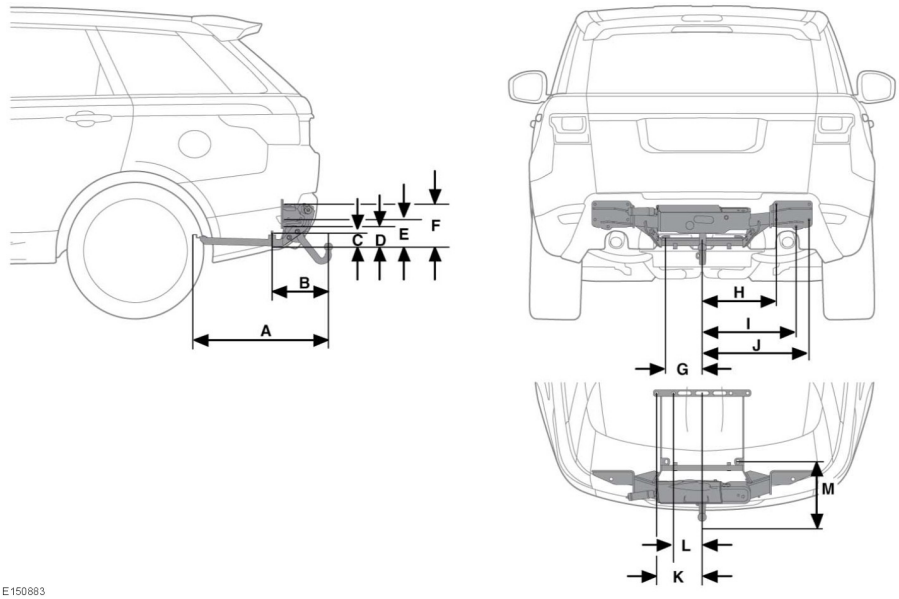

Dimension	Metric (mm)	Imperial (in.)
A	739	29
B	331	13
C	70	2.8
D	128	5
E	170	6.7
F	261	10.3
G	217	8.5
H	438	17.3
I	556	21.9
J	633	24.9
K	274	10.8
L	187	7.4
M	331	13

STARTING THE ENGINE

Never start the engine, or leave it running, when the vehicle is in an enclosed space. Exhaust gasses are poisonous and can cause unconsciousness and death if inhaled.

If the engine fails to start, do not continue cranking as this will discharge the battery. It may also damage the catalytic convertor due to unburnt fuel passing through the exhaust.

Note: *The Smart key may not be detected if it is placed within a metal container or if it is shielded by a device with a back-lit LCD screen, such as a smart phone, laptop (including laptop bag), games console etc. Keep the Smart key clear of such devices when attempting Keyless entry or Keyless starting.*

To start the engine.

1. Make sure a valid Smart key is inside the vehicle.
2. Make sure Park (**P**) or Neutral (**N**) is selected.
3. Firmly depress the brake pedal.
4. Press and release the engine **START/STOP** button.

   Note: *For diesel engined vehicles the delay period before cranking begins will be longer in low ambient temperatures due to extended glow plug operation. During this extended delay the brake pedal must remain depressed.*

Once the engine has started, the brake pedal can be released if it safe to do so.

SWITCHING OFF THE ENGINE

While the vehicle is stationary:

1. Make sure that the vehicle is parked with Park (**P**) selected and the parking brake applied.
2. Press and release the engine **START/STOP** button.

While the vehicle is moving:

It is not advisable to switch off the engine while the vehicle is moving. However, if a situation arises where engine switch off is urgent, the following procedure applies:

1. Press and hold the engine **START/STOP** button for 2 seconds, or
2. Press and release the engine **START/STOP** button twice within 3 seconds. With either method, **Engine Stop Button Pressed** is displayed in the Message centre.

SWITCHING ON THE IGNITION

To switch on the ignition without starting the engine.

1. Make sure the brake pedal is not depressed and that a valid Smart key is inside the vehicle.
2. Press and hold the engine **START/STOP** button until the warning lamps illuminate.
3. Release the engine **START/STOP** button.

If the brake pedal is applied when the engine **START/STOP** button is pressed, the engine will start.

ROLLING RE-START

A rolling restart can be initiated by selecting Neutral (**N**) and pressing the engine **START/STOP** button.

KEYLESS START BACKUP

If the vehicle has been unlocked using the emergency key blade or the Smart key is not detected by the vehicle, it will be necessary to use the keyless start backup to disarm the alarm and start the engine.

The keyless start backup can only be used when the message **Smart Key Not Found - Position As Shown And Press Start Button** is displayed in the message centre.

Electrically adjusted steering column

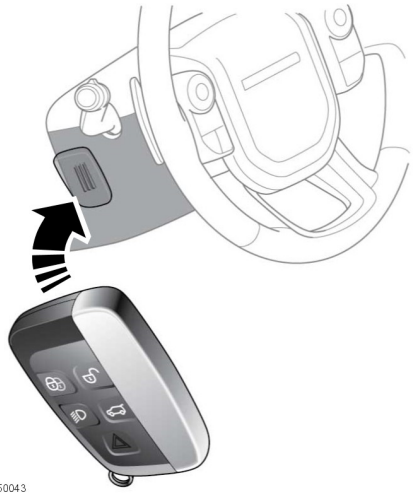

1. Position the Smart key flat against the side of the steering column with the buttons facing outwards.

   Note: *The steering column has markings on the side to aid placement of the Smart key.*

2. Firmly depress the brake pedal.
3. Press and release the engine **START/STOP** button.

Once the engine has started, the brake pedal can be released if it is safe to do so.

If the Smart key is not recognised, or the engine still fails to start, consult a Dealer/Authorised Repairer.

Manually adjusted steering column

1. Position the Smart key against the underside of the steering column with the buttons facing downwards.

   Note: *The steering column has markings on the underside to aid placement of the Smart key.*

2. Firmly depress the brake pedal.
3. Press and release the engine **START/STOP** button.

Once the engine has started, the brake pedal can be released if it is safe to do so.

If the Smart key is not recognised, or the engine still fails to start, consult a Dealer/Authorised Repairer.

IF THE ENGINE FAILS TO START

Note: *If the engine fails to crank when the engine START/STOP button is pressed and there has been a recent collision, the fuel system inertia switch may have been tripped. Seek qualified assistance.*

Make sure that the brake pedal is not depressed. Switch on the ignition (see **97, SWITCHING ON THE IGNITION**) and check the instrument panel for warning lights and the message centre for warning messages. See **45, INSTRUMENT PANEL**. Seek qualified assistance if necessary.

Switch off the ignition.

To reset the alarm system use a valid Smart key to lock and unlock the vehicle. See **5, UNLOCKING THE VEHICLE**.

Note: *The following information applies to petrol engine vehicles only.*

If the engine persistently fails to start.

1. Make sure that a valid Smart key is inside the vehicle.
2. Press and hold the engine **START/STOP** button until the warning lamps illuminate.
3. Firmly depress the brake pedal.
4. Make sure Park (**P**) or Neutral (**N**) is selected.
5. Slowly depress the accelerator pedal fully and hold it in the fully depressed position.
6. Press and release the engine **START/STOP** button. The engine will begin to crank.
7. Release the accelerator pedal when the engine starts.

Once the engine has started, the brake pedal can be released if it safe to do so.

If the engine still fails to crank or start, consult a Land Rover Dealer/Authorised Repairer.

INTELLIGENT STOP/START

The Intelligent stop/start system is designed to improve fuel efficiency and is automatically activated when the ignition is turned on. If the vehicle is stopped (e.g. at traffic lights or in traffic) the engine will turn off (unless it is required to support other vehicle systems). When the brake is released and a drive gear is selected, the engine will restart automatically.

See **52, INTELLIGENT STOP/START (GREEN)**.

To activate an automatic engine stop:

- Stop the vehicle from a speed greater than 4 km/h (2.5 mph) and apply sufficient brake pressure to make sure the vehicle is stationary.
- Alternatively, while stationary, select Neutral (**N**).

To activate an automatic engine restart release the brake pedal with Drive (**D**) or Sport (**S**) selected.

The engine will also restart if one of the following occurs:

- Intelligent stop/start is deactivated.
- The accelerator pedal is pressed.
- A shift paddle is used to select a gear.
- Reverse (**R**) is selected.
- Climate control system demand increases.
- The vehicle's speed exceeds approximately 1 km/h (0.5 mph).
- Battery charge becomes low.
- Brake vacuum has been reduced (e.g. using the brake pedal repeatedly with the engine off).

The following conditions will prevent an automatic engine stop:

- A shift paddle has been used to select a gear.
- The external temperature is less than approximately 0 °C (32 °F).
- The external temperature is more than approximately 40 °C (104 °F).
- The engine has not reached operating temperature.
- The driver's seat belt is not fastened.
- The climate control system demand requires the engine to be running (for example, in Defrost mode).
- The battery charge is low.
- The bonnet is opened.
- Intelligent stop/start is deactivated.

DEACTIVATING INTELLIGENT STOP/START

To switch the system off, press the **ECO** switch.

Note: *The engine will restart automatically if the switch is pressed while an automatic engine stop is in progress.*

To confirm that the system is off, the message **ECO Stop/Start Off** is momentarily displayed in the Message centre.

Note: *The intelligent stop/start system will automatically re-activate the next time the ignition is turned on.*

If the **ECO** switch is pressed while there is a fault, the message **ECO Start/Stop Not Available** is displayed.

ECO-DATA CONTROLS

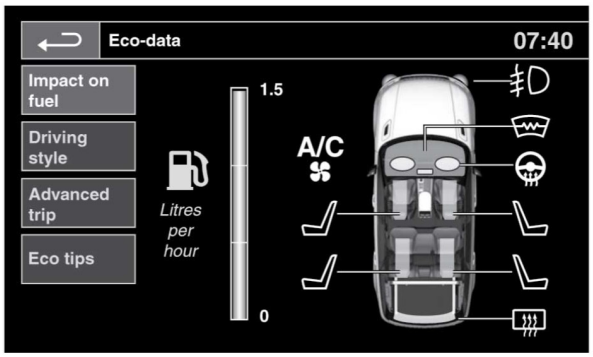

E153348

The Eco-data system is designed to help the driver maximise fuel economy by providing vehicle data and driving tips. The Eco-data system can be accessed through the **Extra features** menu in the Touch screen. See **74, EXTRA FEATURES**

Eco-data can also be displayed in the instrument panel. See **47, TRIP COMPUTER**

When selected, Eco-data provides the following options:

- **Impact on fuel**: This option displays the impact electrical loads are having on fuel economy.
- **Driving style**: This option displays the impact driving style is having on fuel economy.
- **Advanced trip**: This option displays details on the last 3 trips.
- **Eco tips**: This option displays hints and tips on how to improve fuel economy.

Note: *The Eco-data system will only begin recording data after the vehicle has travelled 1 km (0.6 miles).*

Note: *The Eco-data system may not measure or record data when in some Terrain response modes, if Hill Descent Control (HDC) is selected, or if the vehicle is in low range 4-wheel drive.*

Note: *The Eco-data system only monitors driver inputs. Any automatic inputs from the vehicle, for example throttle and brake force applied by the adaptive cruise control system, will not be measured. Data not being measured and recorded will be greyed out in the instrument cluster.*

AUTOMATIC TRANSMISSION

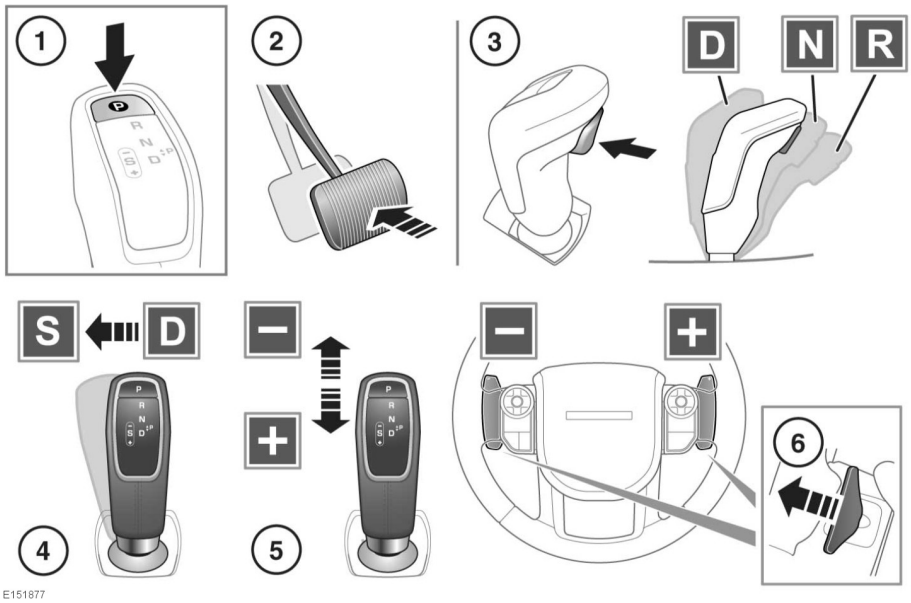

Gear selector status is displayed in the Message centre. See **45, INSTRUMENT PANEL**. Also the appropriate LED indicator, on top of the gear selector, will illuminate to confirm selection.

Park (P) should only be engaged when the vehicle is stationary. If any other gear position is selected while the vehicle is stationary, the vehicle can move unexpectedly, which may result in death or serious injury. Always make sure the parking brake is applied after engaging P.

Never select Park (**P**) while the vehicle is in motion. Doing so can result in serious transmission damage.

Note: P *cannot be selected by manually moving the gear selector.*

1. Press to select Park (**P**). The Park (**P**) switch LED will illuminate to confirm.
   Select **P** before switching off the engine.

   Note: P *can be selected from any gear selector position.*

   Note: *If the engine is switched off with Neutral (**N**) selected, the system will wait for 10 minutes before selecting **P**. This procedure is to allow the vehicle to be conveyed through a car wash only and should not be used for vehicle recovery purposes. See **253, TRANSPORTING THE VEHICLE**.*
2. When the vehicle is stationary, depress the brake pedal prior to selecting Drive (**D**), Neutral (**N**) or Reverse (**R**).

3. With the brake pedal still applied, press the release button to allow the gear selector to be moved:
   - 1 movement back to select Drive (**D**).
   - 1 movement forward to select Neutral (**N**).
   - 2 movements forward to select Reverse (**R**).

   Note: *When the gear selector is released, after normal operation, it will return to the central position, except for when in the Sport (**S**) position.*

   Never select Reverse (**R**) while the vehicle is in forward motion. Doing so can result in serious transmission damage.

   Never select a forward gear while the vehicle is moving backwards. Doing so can result in serious transmission damage.

   Note: *The release button is required for all gear selections, except for when selecting **N** from **D** or **R** and selecting **S** from **D** or **D** from **S**.*

4. While in **D**, move the gear selector one side movement to select **S**.

   Note: *Reverse this action to return to **D**.*

5. While in **S**, manual selection of the gears can be made by pulling the gear selector back for upshifts and pushing forward for downshifts.
   Manual gear selection status is displayed in the Message centre. See **45, INSTRUMENT PANEL**.
   Also the relevant gear selector LED indicator will indicate the status of manual gear selection:
   - Continuous illumination confirms the driver's gear change request has been recognised and selected.
   - On/off flashing confirms the driver's gear change request has been recognised, but not selected.

6. Gear shift paddles allow manual gear selection while in **D** or **S**. Operate the left paddle for downshifts and the right paddle for upshifts.
   Pull the paddle briefly to change gear.
   To exit manual mode, pull and hold the right paddle for approximately one second to return directly to previous automatic operation in **D** or **S**.

   Note: *The gear shift paddles can be switched on and off, and configured to operate in '**S only**' or '**D and S**' via the **Vehicle Set-up** menu. See **45, INSTRUMENT PANEL**.*

   Do not allow the vehicle to remain stationary with a drive gear selected and the engine running. If the engine is to idle for a prolonged period, select *N* and apply the parking brake.

MANUAL GEAR SELECTION

When **D** is selected, Manual mode may be temporarily accessed by operating the steering wheel mounted shift paddles.

While in **D**, temporary Manual mode will be held while the driver is accelerating, decelerating, cornering or continuing to request shifts via the paddles.

If continued use of temporary Manual mode (via the shift paddles) is required, select **S**. Temporary Manual mode will be automatically deactivated if the engine is over-revved or laboured, to prevent transmission and/or engine damage.

Manual gear selection will be accompanied by the gearshift indicator. See **52, GEAR SHIFT (GREEN)**.

When the transmission is set to permanent Manual mode (i.e. using the paddles to change gear while in the **S** position and Dynamic mode is selected, see **134, DYNAMIC**) transmission up-shifts are fully controlled by the driver. This means that the transmission will not change up a gear automatically, even when the vehicle's rev limit is reached.

HILL DESCENT

With Hill Descent Control (HDC) selected in either Drive (**D**), Sport (**S**) or manual gear selection (CommandShift™) modes, a low gear will be selected and maintained to provide maximum engine braking. Should the selector be moved to Drive (**D**) from the Sport (**S**) mode or if CommandShift™ is deactivated, the selected gear will be retained until the descent is completed. See **135, HDC CONTROLS**.

STATIONARY RANGE CHANGING

With the vehicle stationary and the engine running, select Neutral (**N**).

Press the **Lo** range button and release. The range change status will be confirmed after several seconds.

RANGE CHANGE INDICATORS

While the **Hi** range transmission is in use, no range indicators are illuminated

In **Lo** range, the green warning lamp in the message centre and the **Lo** range status indicator lamp on the **Lo** button will illuminate.

While a range change is in progress, the indicator lamps will flash as follows:

Hi to Lo change:

- The **Lo** range indicator lamps flash during the change and then illuminate constantly.
- The message **LOW RANGE SELECTED** is briefly displayed in the message centre.

Lo to Hi change:

- The **Lo** range indicator lamps flash during the change.
- The **Lo** range indicator lamps extinguish when the change is complete.
- The message **HIGH RANGE SELECTED** is briefly displayed in the message centre.

RANGE CHANGING ON THE MOVE

The recommended method of changing range is with the vehicle stationary. For experienced off-road drivers, a change from **Lo** to **Hi** while on the move can be accomplished, as detailed below.

Note: *Changing from **Hi** to **Lo** can be performed only with the vehicle stationary.*

CHANGING FROM LOW TO HIGH RANGE

With the vehicle travelling no faster than 60 km/h (38 mph), select Neutral (**N**). Press and release the **Lo** button to select **Hi** range.

Note: *If the **Lo** button is pressed before **N** is selected, the message **SELECT NEUTRAL FOR RANGE CHANGE** will be displayed in the message centre.*

Indication of the range change status will be displayed in the message centre.

Once complete, select Drive (**D**).

LIMP-HOME MODE

Note: *The driver should be aware that the vehicle's performance will be reduced and must take this into account when driving. Use of the gear shift paddles will be disabled. In this event, seek qualified assistance as soon as possible.*

In the event of an electrical or mechanical failure, transmission operation will be limited. **P**, **R**, **N**, **D** and **S** may still be used to enable the vehicle to be driven to a safe area.

Some faults will cause the selector to be locked in position until the ignition is switched off. If the selected gear flashes, it signifies that the driver request cannot be engaged. Re-select **N** and repeat the attempt.

If the transmission is still unable to select the requested gear, contact your Dealer/Authorised Repairer.

DYNAMIC STABILITY CONTROL (DSC)

Dynamic Stability Control (DSC) is unable to compensate for driver misjudgement. It remains the driver's responsibility to drive with due care and attention, in a manner which is safe for the vehicle, its occupants and the other road users.

This vehicle is not designed for cornering at the same speed as conventional passenger cars any more than a low-slung sports car is designed to perform satisfactorily under off-road conditions. If at all possible, avoid sharp turns or abrupt manoeuvres. As with other vehicles of this type, failure to operate the vehicle correctly may result in loss of control or vehicle rollover.

DSC maintains vehicle stability, even in critical driving situations. The system controls dynamic stability when accelerating and when starting from a standstill. Additionally, it identifies unstable driving behaviour, such as understeer and oversteer and helps to keep the vehicle under control by manipulating the engine output and applying the brakes at individual wheels. Some noise may be generated when the brakes are applied.

SWITCHING DSC OFF

Safety may be reduced by inappropriately disabling DSC. In the majority of driving situations, and particularly on-road, it is recommended that you do not disable DSC.

DSC must be switched off when traction devices are fitted. See **238, USING SNOW CHAINS**.

In some driving conditions it may be appropriate to disable DSC to improve traction. These conditions include:

- Rocking the vehicle out of a hollow or deep rut.
- Pulling away in deep snow, or a loose surface.
- Driving through deep sand or mud.

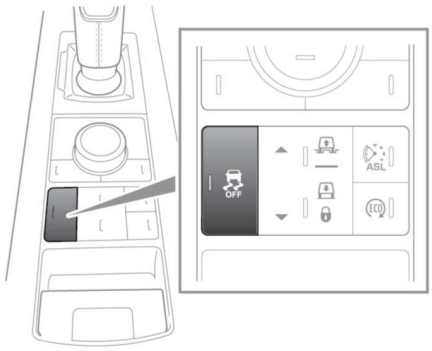

E150087

To disable DSC, press and briefly hold the DSC OFF switch. The DSC OFF warning lamp will illuminate (see **50, DYNAMIC STABILITY CONTROL (DSC) OFF (AMBER)**). Deactivating DSC also reduces the level of Traction control intervention and may lead to an increase in wheel spin.

Note: *DSC cannot be disabled in Automatic mode. See **133, TERRAIN RESPONSE OPERATION**.*

SWITCHING DSC ON

Note: *DSC is enabled automatically at the start of each ignition cycle.*

Press and briefly hold the DSC OFF switch to re-enable DSC. Alternatively, select a new Terrain response special programme.

Note: *DSC is automatically disabled when the ignition is switched off.*

AIR SUSPENSION SYSTEM

Make sure that the vehicle is clear of people and obstacles before lowering the suspension. The difference between Off-road height and Access height can be 115 mm (4.5 in).

The air suspension system may be used to raise or lower the height of the vehicle, using the air suspension control switch.

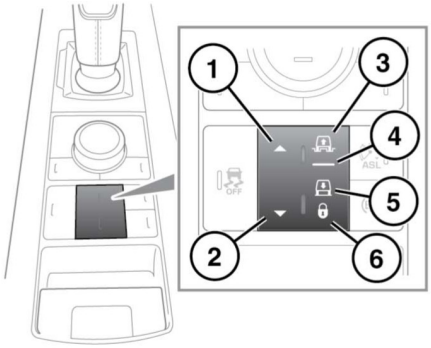

E150103

1. Raise the suspension height.
2. Lower the suspension height.
3. Off-road height indicator.
4. Normal height indicator.
5. Access height indicator: Access height is 50 mm (2.0 in) lower than normal height.
6. Suspension locked in Access height indicator.

Note: *The system may raise or lower the vehicle automatically (e.g. if a terrain response program requires it, or if the vehicle is travelling at high speed).*

Changes to the height of the vehicle must be made when all doors are closed. Except for remote operation (see **109, REMOTE OPERATION**) the engine must also be running or in Intelligent stop/start mode. If a door is opened during a height change, the height change will be suspended. If the door is closed within 90 seconds, the height change will resume. If the doors are not closed in time the message centre will display a message **CONFIRM REQUIRED SUSPENSION HEIGHT**. Driving off will return the vehicle to normal height.

Note: *If the air suspension is used many times in succession, speed of operation may slow.*

OFF-ROAD HEIGHT

Off-road height can be selected from normal height by pressing up on the raise/lower switch (**1**) at any speed up to 70 km/h (43 mph). The message centre will display **OFF-ROAD HEIGHT SELECTED**.

The Off-road height is dependent upon vehicle speed. The Off-road height selected will be confirmed with an **Off-Road (1)** or **(2)** icon in the Touch screen display when in the **4x4 info** menu.

Off-Road 1 height is 35 mm (1.4 in) above normal height up to 80 km/h (50 mph). **Off-Road 2** height is 65 mm (2.6 in) above normal height up to 50 km/h (31 mph). The suspension height can change automatically between these heights. **Off-Road 2** can be selected when at **Off-Road 1** height by pressing up on the raise/lower switch when travelling less than 40 km/h (25 mph).

To select normal height, press down on the raise/lower switch (**2**) or increase the speed above 80 km/h (50 mph).

EXTENDED MODE

If the vehicle body is raised (e.g. by jacking) or grounded in severe off-road conditions, the system may automatically enter Extended mode. Symbols in the raise/lower switch will flash and the message centre will display **SUSPENSION IN EXTENDED MODE**. The suspension can rise automatically to assist in clearing the obstacle.

Once extended mode height has been achieved, the driver may request additional lifting if required. This is achieved by pressing up and holding the raise/lower switch for longer than 3 seconds while pressing the brake pedal.

Extended mode is cancelled by pressing down on the raise/lower switch (**2**) or when the vehicle speed confirms that the body is no longer lifted or grounded.

Note: *Extended mode cannot be selected manually.*

ACCESS HEIGHT

To select Access height, press down on the raise/lower switch (**2**). If the suspension is at Off-Road height then press down twice on the raise/lower switch. **ACCESS HEIGHT SELECTED** will be displayed in the message centre. Access height can be selected at any speed, but the height will not change until travelling slowly. Access selection is cancelled if the vehicle speed does not slow sufficiently within 1 minute.

Note: *Access height may be selected up to 1 minute after the ignition is switched off, provided the driver's door has not been opened.*

Normal driving will automatically return the suspension from Access height to the previous selected setting.

Normal height can be selected by pressing up on the raise/lower switch (**1**).

LOCKED ACCESS HEIGHT

When the vehicle is at Access height and travelling less than 35 km/h (22mph), press down on the raise/lower switch (**2**) for longer than 1 second. The system lock indicator (**5**) will illuminate and **SUSPENSION LOCKED AT ACCESS HEIGHT** will be displayed in the message centre.

The vehicle may then be driven slowly at Access height, to assist with manoeuvring in confined areas (e.g. multi-storey car parks).

To cancel this mode, press up on the raise/lower switch (**1**) for longer than 1 second or increase the speed to 40 km/h (24 mph).

REMOTE OPERATION

The Smart key can be operated from inside or outside the vehicle. It is therefore important that it is kept out of the reach of children at all times.

Make sure the vehicle is clear of people and obstacles before lowering the suspension. The difference between Off-road height and Access height can be 115 mm (4.5 in).

Care should be taken with all height changes when a trailer is attached to the vehicle.

The buttons on the Smart key may be used to operate the air suspension system, allowing the vehicle to be raised or lowered remotely. This may be useful in attaching a trailer or loading the vehicle.

To change the suspension height using the Smart key, the vehicle must be stationary, all the doors closed and the hazard warning lamps switched on.

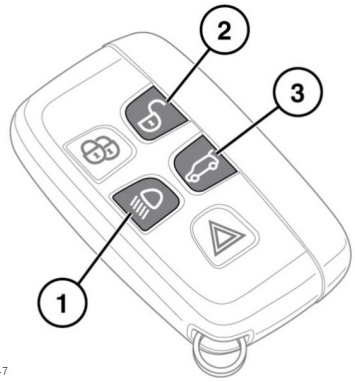

E134947

To raise the vehicle press and hold button (**1**) and button (**2**) together.

To lower the vehicle press and hold button (**1**) and button (**3**) together.

Note: *If the starting height is above or below normal height, movement will cease when normal height is reached. Release the Smart key buttons and press again to continue.*

ADAPTIVE DYNAMICS

If a fault is detected the Instrument panel will illuminate either the Critical or General warning lamp. See **49, CRITICAL WARNING MESSAGE (RED)49, GENERAL WARNING/INFORMATION MESSAGE (AMBER)** The warning messages **ADAPTIVE DYNAMICS FAULT** or **SUSPENSION FAULT VEHICLE LEAN WHEN CORNERING** will also be displayed in the message centre. Some reduction in ride comfort may be experienced. If the fault persists, consult a Land Rover Dealer/Authorised Repairer.

SUSPENSION LOWERED FOR SAFETY

The vehicle ride height will be reduced. Exercise caution while driving off-road.

In the event of a fault with the DSC system, the ride height will be lowered to increase vehicle stability. This will be accompanied by a message in the message centre and the indicators on the air suspension control switch will extinguish.

The suspension is lowered to increase vehicle stability and overriding the suspension ride height reduction is not recommended. Doing so could result in a vehicle rollover during extreme manoeuvres.

To override the ride height reduction:

1. Press the raise/lower switch.
2. Follow the instructions in the message centre.

   Note: *If the vehicle is driven enthusiastically while the system override is active, a message will be displayed in the message centre as a reminder that a safety system has been bypassed. A further message will provide instructions for cancelling the override.*

IMPORTANT INFORMATION

Do not rest your foot on the brake pedal while the vehicle is in motion.

Never allow the vehicle to coast (freewheel) with the engine turned off. The engine must be running to provide full braking assistance. The brakes will still function with the engine off, but far more pressure will be required to operate them.

If the red brake warning lamp illuminates, safely bring the vehicle to a stop, as quickly as possible and seek qualified assistance.

Never place non-approved floor matting or any other obstructions under the pedals. This restricts pedal travel and braking efficiency.

Driving through heavy rain or water can have an adverse effect on braking efficiency. Under such circumstances, it is recommended that you lightly apply the brakes intermittently, to dry the brakes.

HILL START ASSIST

Hill Start Assist activates when starting a hill ascent from a stationary position. When the foot brake is released Hill Start Assist smoothly releases the brake pressure, allowing the vehicle to move away without rolling backwards.

Any fault with Hill Start Assist will be indicated by the DSC warning lamp being illuminated and a message in the message centre.

STEEP SLOPES

If the vehicle is stationary on a steep, slippery slope, it may begin to slide even with the brakes applied. This is because without wheel rotation, the ABS cannot determine vehicle movement.

To counteract this, briefly release the brakes to allow some wheel rotation and then re-apply the brakes to allow ABS to gain control.

EMERGENCY BRAKE ASSIST (EBA)

If the driver rapidly applies the brakes, EBA automatically boosts the braking force to its maximum, in order to bring the vehicle to a halt as quickly as possible. If the driver applies the brakes slowly, but conditions mean that ABS operates on the front wheels, EBA will increase the braking force in order to apply ABS control to the rear wheels.

EBA stops operating as soon as the brake pedal is released.

A fault with the EBA system is indicated by the brake warning lamp (see **50, BRAKE (AMBER)**) illuminating and an associated warning message. Drive with care, avoiding heavy brake application and seek qualified assistance.

ELECTRONIC BRAKE FORCE DISTRIBUTION (EBD)

EBD controls the balance of braking forces supplied to the front and rear wheels, in order to maintain maximum braking efficiency.

If the vehicle has a light load (only the driver in the vehicle for example), EBD will reduce the braking force applied to the rear wheels. If the vehicle is heavily laden, EBD will allow greater braking force to the rear wheels.

A fault with the EBD system is indicated by the brake warning lamp (see **49, BRAKE (RED)**) illuminating and an associated warning message. Gently and safely stop the vehicle and seek qualified assistance.

ELECTRIC PARKING BRAKE (EPB)

The parking brakes operate on the rear wheels. Therefore, secure parking of the vehicle is dependent on being on a hard and stable surface.

Do not rely on the parking brake to operate effectively, if the rear wheels have been immersed in mud or water.

Note: *If the vehicle is used in severe off-road conditions (e.g. wading, deep mud, etc.), additional maintenance and adjustment of the parking brake will be required. Consult your Land Rover Dealer/Authorised Repairer.*

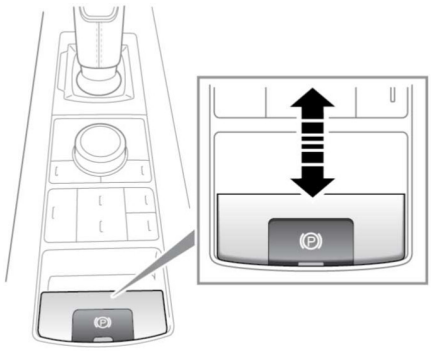

E150131

With the ignition turned on, press the brake pedal and press down on the EPB switch. This will release the electronic parking brake.

With the vehicle stationary, pull up the EPB switch and release it to apply the parking brake. The parking brake warning lamp (see **50, PARKING BRAKE (RED)**) illuminates to indicate that the parking brake is applied.

If the EPB is operated when the vehicle speed is less than 3 km/h (2 mph) the vehicle will be brought to an abrupt stop. The stop lamps will not be illuminated.

Driving the vehicle with the parking brake applied, or repeated use of the parking brake to slow the vehicle, may cause serious damage to the brake system.

In an emergency, with the vehicle travelling more than 3 km/h (2 mph), pulling on the EPB switch and holding gives a gradual reduction in the speed. The brake warning lamp will illuminate accompanied by a warning tone and a warning message in the Driver information centre. The stop lamps will illuminate.

If the vehicle is stationary with the EPB applied and the transmission in **D** or **R**, pressing the accelerator will release the EPB and allow the vehicle to move off.

Note: *Automatic release of the EPB is only possible when the driver's door is closed or the driver's seat belt is buckled.*

When shifting from **P** (Park) with the EPB applied, the EPB will automatically release to allow a smooth drive away.

If the system detects a fault with the EPB, the amber brake warning lamp will illuminate accompanied by a warning in the message centre.

If the system detects a fault while EPB is operating, the red parking brake warning lamp will flash, accompanied by a warning in the message centre.

Note: *The red parking brake warning lamp will continue to be illuminated for at least ten seconds after the ignition has been turned off.*

USING THE PARKING AID

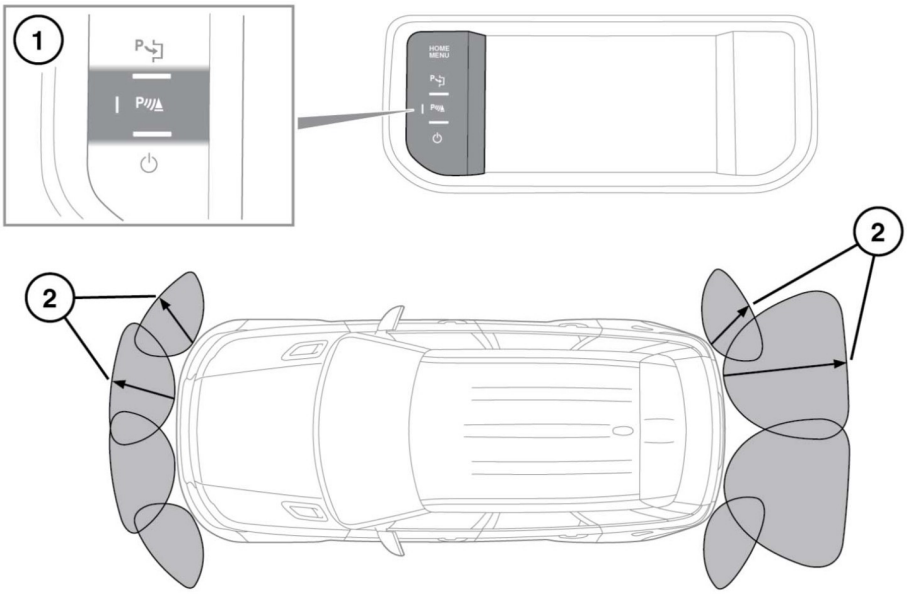

1. Parking aid button.
2. Parking aid sensor detection zones.

Parking aid sensors will not detect moving objects such as children and animals, until they are dangerously close. Always use extreme caution when manoeuvring.

Parking aid sensors may not detect some obstructions, for example narrow posts or small objects close to the ground.

If accessories, e.g., tow bar, are fitted to the rear of the vehicle, particular care must be taken when reversing. The rear sensors will only indicate the distance from the bumper to the obstacle.

Note: *If a trailer is connected to a Land Rover approved trailer socket, the rear sensors will be disabled.*

The Parking aid system is automatically activated when the vehicle speed decreases to less than 10 km/h (6 mph) or when Reverse (**R**) gear is selected. The Parking aid button indicator will illuminate to inform the driver that the system is active. To switch the Parking aid system off, press the button.

The Parking aid system will remain off until the next ignition cycle, Reverse (**R**) gear is selected, or the system is manually switched back on again.

The Parking aid system assists the driver while manoeuvring the vehicle in confined spaces. When active, object tracking along the front or rear of the vehicle will be displayed on the Touch screen.

When Reverse (**R**) gear is selected, both front and rear sensors will be active. When Drive (**D**) is selected, only the front sensors will be active.

Note: *If the system does not detect an object likely to come into contact with the vehicle, it will not display any tracking information in the Touch screen.*

When in Reverse (**R**) both the front and rear sensors are active, when in Drive (**D**) only the front sensors are active.

When objects are detected, the Parking aid systems emit a warning tone which increases in frequency as the vehicle gets closer to an object. The tone becomes constant when the obstacle is within 300 mm (12 inches).

The Parking aid system operates up to a speed of 16 km/h (10 mph).

CLEANING THE SENSORS

When washing the vehicle do not aim high pressure water jets directly at the sensors. Do not use abrasive materials or hard/sharp objects to clean the sensors. Only use approved vehicle shampoo.

The sensors should be kept clean to maintain accuracy and performance.

PARKING AID SYSTEM FAULT

If a system fault is detected, a long high-pitched tone will sound, the switch indicator will flash and the message **Parking Aid is not available. Please consult your dealer** will be displayed on the Touch screen. Contact your Dealer/Authorised Repairer as soon as possible.

REAR CAMERA

It remains the driver's responsibility to detect obstacles and estimate the vehicle's distance from them when reversing.

Some overhanging objects or barriers which could cause damage to the vehicle, may not be detected by the camera.

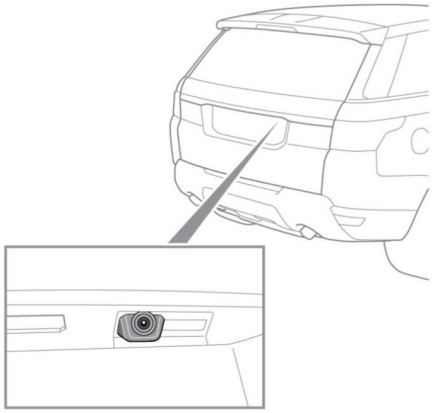

E149960

When reverse gear is selected, the screen automatically displays a wide angle, colour image from the rear of your vehicle.

The rear view camera system provides a rear view image to assist in reversing the vehicle. Overlaid on the image are reversing guidelines.

To adjust the camera settings while in reverse, touch anywhere on the Touch screen to display the user options or select **Extra features**, from the home menu, touch **Cameras** and select **Settings**.

Note: *A camera icon will be displayed on the user options screen, when selected from **Extra features**. Touch the camera icon, to return the rear view camera screen*

Note: *The rear camera display has priority over the Parking aids display. To cancel the camera display at any time, push the* ***Home Menu*** *button or touch the back soft key.*

Rear view camera display on the Touch screen will discontinue when either of the following apply:

- Drive is selected for longer than 5 seconds.
- Drive is selected and/or vehicle speed is greater than 18 km/h (11 mph).

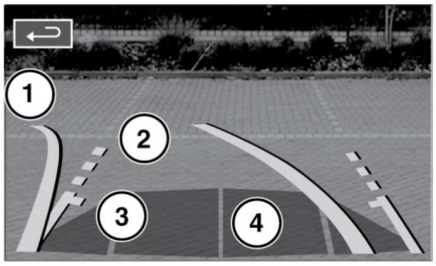

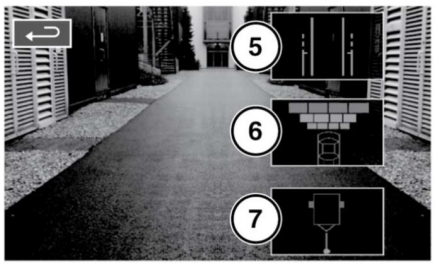

E153094

1. Solid line: The projected path based on current steering wheel position.
2. Dotted line: The safe working width of the vehicle (including exterior mirrors).
3. Tailgate access guideline: Do not reverse beyond this point if tailgate access is required.
4. Parking sensor activation: A coloured area appears, to indicate which rear sensor(s) has been activated.
5. Touch to enable/disable (**1**), (**2**) and (**3**).
6. Touch to enable/disable (**4**) Parking sensor.
7. Touch to enable/disable Hitch Assist guidance lines. (**5**) and (**6**) will be disabled when the Hitch Assist guidance is active.

REVERSE TRAFFIC DETECTION

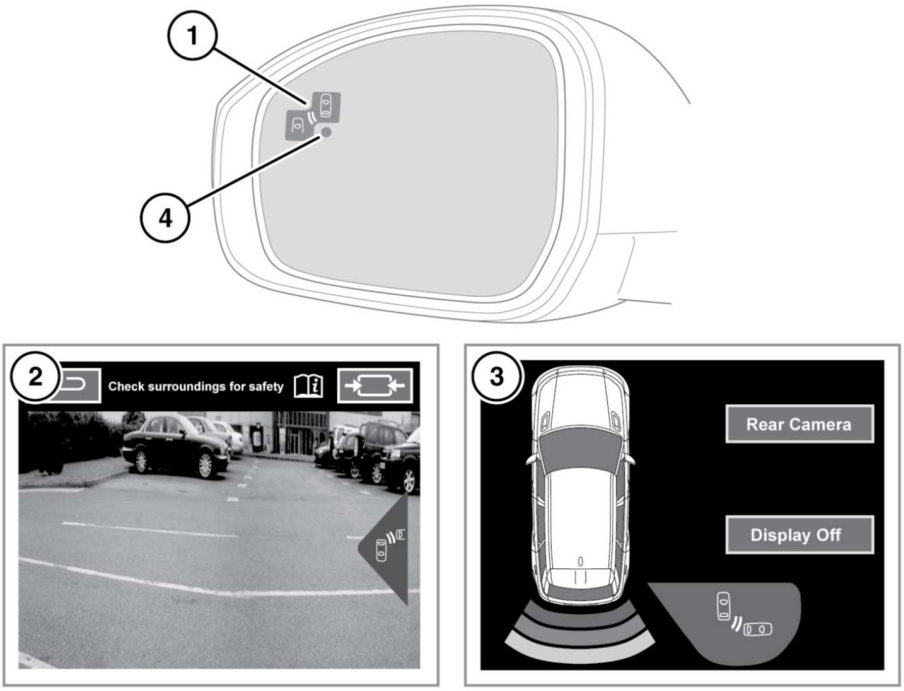

E149959

The Reverse Traffic Detection (RTD) system is a supplement to, not a replacement for, safe driving, good observation and use of the exterior and rear-view mirrors.

Note: *RTD is automatically disabled when a trailer is connected and when Park assist is active.*

In addition to the functionality provided by the rear view camera, the RTD system provides a warning to the driver of any moving vehicle, at either side, that may pose an accident risk during a reversing manoeuvre.

An amber warning icon (**1**) will flash in the relevant exterior mirror and an audible warning will be emitted to indicate the presence of a moving vehicle. The rear view camera screen (**2**) or the parking aid screen (**3**) will also show a warning on the relevant side(s) of the screen. To switch between the rear view camera and the parking aid screen, touch the camera image or the **Rear camera** icon accordingly.

The system can be enabled or disabled via the instrument panel menu. See **46, INSTRUMENT PANEL MENU**. When RTD is disabled, an amber dot (**4**) will be displayed in both exterior mirrors.

REVERSE TRAFFIC DETECTION SENSORS

The RTD system will automatically disable if any of the sensors become partially or completely obscured. The amber warning indicator dot will illuminate in the exterior mirrors and the message **Reverse Traffic Sensor Blocked** appears in the message centre.

Check that there is nothing obscuring the rear bumper and it is clear from ice, frost, snow, mud and dirt.

If a fault with a radar sensor is detected, an amber warning indicator dot will illuminate in the exterior mirrors and the message **Reverse Traffic Detection System Not Available** is displayed in the message centre.

Note: *Even if the detected fault only affects the radar sensor on one side of the vehicle, the whole system is disabled. If the fault is temporary, the system will operate correctly once the engine has been switched off and then on again.*

If a fault occurs, consult your Dealer/Authorised Repairer.

PARK ASSIST

Park assist is an aid to parallel parking in tight parking slots. For the system to operate correctly, your vehicle must be parallel to a line of parked vehicles along which you intend to search for a parking space. Your front wheels must be in the straight ahead position. Parking on a bend may cause the system to miscalculate distances.

When the sensors detect a space sufficient to park in, instructions will be displayed in the Message centre.

The actual parking manoeuvre is controlled by the vehicle's steering, without your hands on the steering wheel. The Message centre will tell you when the steering wheel must be released.

The driver must maintain full control of the accelerator and brakes throughout the manoeuvre.

Park assist is a driving aid only. It remains the driver's responsibility to drive with due care and attention during parking manoeuvres.

Park assist will not detect moving objects, such as children and animals, until they are dangerously close. Always use extreme caution when manoeuvring.

Park assist sensors may not detect some obstructions, e.g., narrow posts, small objects close to the ground, mesh fences and, in some circumstances, bicycles or motor cycles parked alongside the kerb.

All sensors must be kept clean and free from debris or obstructions, e.g., ice, frost, snow, leaves, mud or insects. Failure to keep the sensors clean may result in sensor miscalculation or false indications.

Park assist must not be used if:

- A temporary spare wheel is in use.
- A sensor is damaged, or the bumper is damaged sufficiently to affect a sensor mounting point.
- A sensor is obstructed by items attached to the vehicle, e.g., bumper covers, a bicycle rack, a trailer, stickers, etc.
- The vehicle is being used to transport a load that extends beyond the vehicle's perimeter.

Park assist will not be available if a trailer is connected.

Note: *All of the doors and tailgate should be securely closed.*

Note: *During any Park assist manoeuvre, the Parking aid system will remain active and will sound when objects are detected near the vehicle.*

Note: *A parking manoeuvre can be cancelled at any point by holding/turning the steering wheel or by pressing the Park assist button.*

Note: *In a situation where the rows of parked vehicles on either side of the road are close enough for Park assist to sense them and Park assist determines that there is not enough manoeuvring space for reverse parking, the space will be rejected, even if the driver believes the space is large enough to park the vehicle. The driver retains the option to switch off Park assist and to attempt the parking manoeuvre manually.*

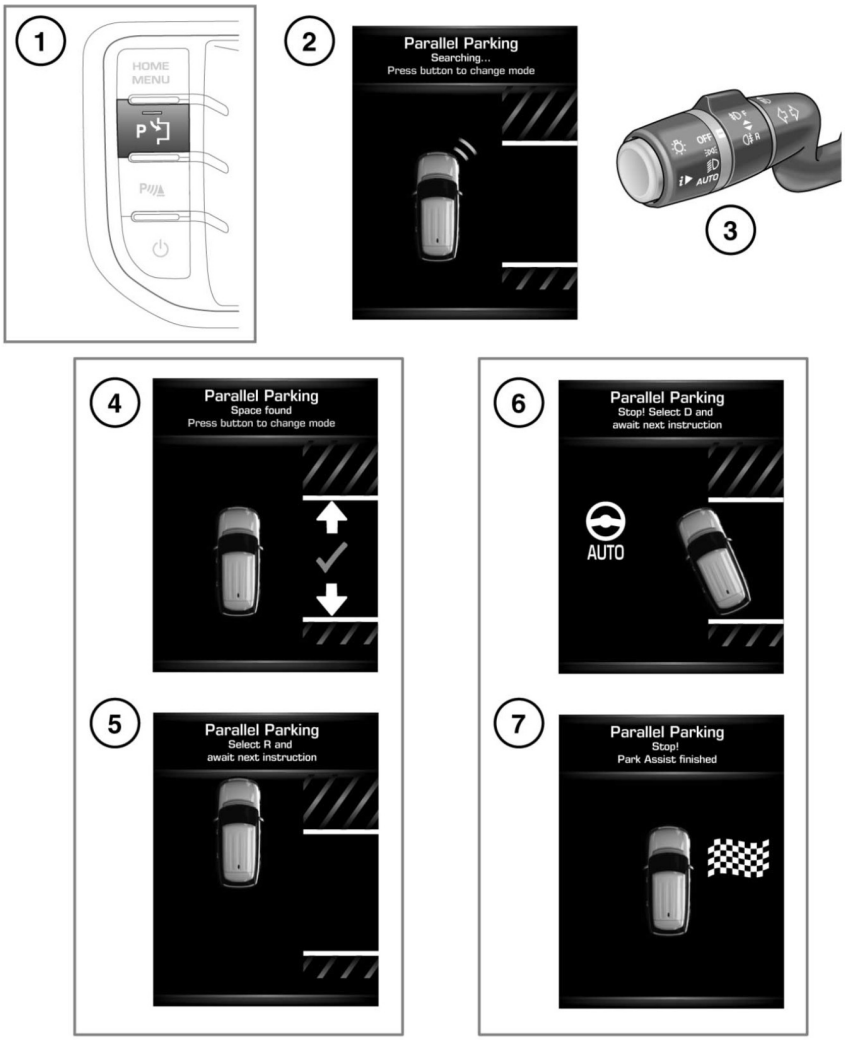

E153606

1. To activate, press the Park assist button while driving forwards at less than 18 km/h (11 mph). The Park assist button indicator will illuminate.
   Auto searching is active while the vehicle's speed is below 30 km/h (18 mph). When Park assist is activated, a previous space may already be located and can be displayed in the Message centre. To obtain a previous space on either side, signal a turn in that direction and press the Park assist button.

   Note: *If the vehicle's speed exceeds 30 km/h (18 mph), Park assist will deactivate and the Parking assist button indicator will extinguish. If Park assist is selected while the vehicle is travelling between 18 km/h (11 mph) and 30 km/h (18 mph), the message* ***Parallel Park Maximum Speed 30 kph*** *will be displayed.*
2. When first activated Park assist searches for a space on the front passenger side of the vehicle. To search for a space on the driver's side, signal a turn in that direction.
3. The Park assist display appears in the Message centre and shows the **Searching** message and graphic. All messages and instructions are displayed here. Take action when the text or audio alerts an instruction. As you drive forward, the size of potential parking spaces are assessed and displayed graphically.

   Note: *For Park assist to search effectively, maintain a distance of 0.5 to 1.5 metres (1.6 to 4.9 ft) between your vehicle and the line of parked vehicles/obstacles in which you want to park.*
4. A short confirmation tone is given when a suitable space is found and the message **Space found** will be displayed. Next, the message **Drive forward** or **Stop! and release wheel** will be given, depending on the vehicle's current position.

   Make a visual check before starting the reversing manoeuvre to make sure the space has not changed in any way.
5. When the vehicle is at a standstill an instruction to **Select R and await next instruction** will be given. Park assist will then take control of the vehicle's steering system and the steering wheel must be released. Release the foot brake carefully to move the vehicle slowly into the parking space. Follow the instructions in the message centre.

   The driver must maintain full control of the accelerator and brakes throughout the manoeuvre.

   Do not move the vehicle until the message **Parallel Parking. Reverse with care** appears in the Message centre.

   Note: *If the steering wheel is manually turned while Park assist has control of the steering, Park assist will deactivate, Park assist will deactivate and the Park assist button indicator will extinguish.*

   Note: *Park assist can be reactivated by pressing the Park assist button and the previous parking manoeuvre will be resumed. The Message centre will advise if automated steering can be resumed.*

   Note: *If the vehicle's speed exceeds 5 km/h (3 mph) during the parking manoeuvre, Park assist will display the message* ***Parallel Parking Maximum Speed 4 mph*** *until speed decreases to less than 5 km/h (3 mph). If the vehicle's speed exceeds 7 km/h (4 mph), Park assist will deactivate and the indicator lamp in the Park assist button will extinguish.*

6. If further manoeuvering is required in the parking space, follow the instructions, **Stop! Select D and await next instruction** or **Stop! Select R and await next instruction** displayed in the Message centre.
7. When the parking manoeuvre is complete, **STOP! Park Assist finished** will be displayed.

If a system fault is detected, a continuous tone will sound and a message will be displayed in the Touch screen. Contact your Dealer/Authorised Repairer as soon as possible.

PARK ASSIST LIMITATIONS

Park assist is a supplement to, and not a replacement for, good observation and a safe driving style. It is the driver's responsibility, at all times, to make sure that reversing manoeuvres are carried out safely.

Park assist may provide inaccurate results if:

- The size or shape of the parking spaces changes after it was measured.
- There is an irregular kerb alongside the parking space or the kerb is covered with leaves, snow etc.
- The vehicle is being used to transport a load that extends beyond the perimeter of the vehicle.
- The vehicle had a repair or alteration that was not approved by a Land Rover Dealer/Authorised Repairer.
- The vehicle has been fitted with non approved wheels or tyres or there is significant tyre wear.
- One of the parked vehicles has an attachment at a raised height such as a flat bed, snow plough or cherry picker.
- The parking space is located on a corner or curve.
- The sensors are dirty or covered in mud, ice or snow.
- The weather is foggy, raining or snowing.
- The road surface is bumpy such as gravel.
- A tow bar or trailer hitch is fitted.
- A trailer is connected.

  Note: *If a trailer is connected to a Land Rover approved trailer socket, the Park assist system will be disabled.*
- It encounters an obstruction that is thin or wedge shaped.
- It encounters an obstruction that is elevated and/or protruding, such as ledges or tree branches.
- It encounters an obstruction with corners and sharp edges.

PARK ASSIST TROUBLESHOOTING

Park assist is not searching for a parking space:

- The system may not be activated.
- The vehicle may be travelling above 30 km/h (18 mph).
- The sensors may be covered or partly obscured by dirt, mud, ice or snow.

Park assist does not offer a certain parking space:

- The sensors may be covered or partly obscured by dirt, mud, ice or snow.
- The space may not be large enough or there may not be enough space on the opposite side of the vehicle for the front to swing out during the manoeuvre.
- The vehicle may have been driven too far away (more than 1.5 metres [5 feet]) from the row of parked vehicles.

- The vehicle may have been driven too close (within 41 cm [16 inches]) to the row of parked vehicles.
- The vehicle may have been driven in reverse. Park assist will only search for a parking space when the vehicle is in Drive (**D**).
- The approach angle may not be suitable.

Park assist has not positioned the vehicle accurately within the space:

- 1 or more of the system limitations criteria may have been met. See **122, PARK ASSIST LIMITATIONS**.

Automatic speed limiter (ASL)

ASL CONTROLS

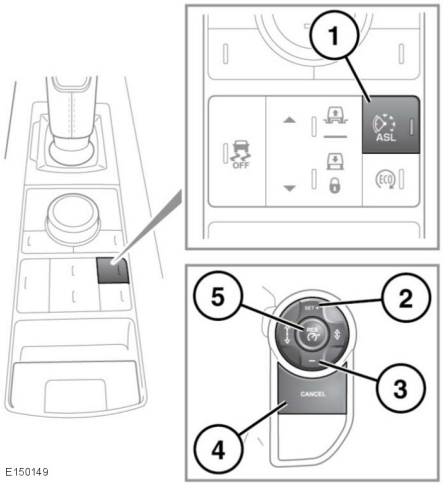

ASL allows a speed limit to be set that the driver does not wish to exceed.

In certain conditions, such as a steep downhill gradient, the vehicle speed may exceed the set speed limit. This is because engine braking is unable to maintain or reduce the vehicle speed.

1. ASL on/off. The ASL button switches between cruise control and ASL. The systems cannot be used simultaneously. The ASL indicator will illuminate when ASL is active. See **51, AUTOMATIC SPEED LIMITER (AMBER)**.

When the vehicle ignition is switched on, the previous state, either cruise control or ASL, will automatically be recalled and made active. The set speed will not be recalled.

Note: *ASL operates at all vehicle speeds. A vehicle speed can be set from upwards of 32 km/h (20 mph).*

2. Set/increase speed limit. The set speed limit will be displayed in the Message centre. When a speed has been set, the engine will respond normally up to the set speed. Further accelerator pressure will not increase the speed beyond the set speed unless sudden, rapid acceleration (kickdown) is applied. If kickdown is initiated, ASL will be suspended. ASL will reactivate once vehicle speed drops below the set speed.
3. Decrease speed limit. The set speed limit will be displayed in the Message centre.
4. Suspend ASL assistance. ASL can also be suspended by applying sudden, rapid acceleration (kickdown).
5. Resume ASL assistance. ASL will only resume if the vehicle speed is less than the set speed and greater than 32 km/h (20 mph). If these criteria are not met, a message will be displayed in the Message centre.

USING CRUISE CONTROL

In certain conditions, such as a steep gradient, the vehicle speed may exceed the set cruising speed. This is because engine braking is unable to maintain or reduce the vehicle speed. Driver intervention may be required.

Note: *Cruise control is not available when using Hill Descent Control, or when the Sand, Mud or Rock Crawl Terrain Response programs are selected.*

Note: *Do not use cruise control when driving off-road.*

E139183

1. **SET+**: Press to set the speed or to increase the set speed. The cruise control indicator illuminate to confirm cruise control is operational (see **52, CRUISE CONTROL (GREEN)**).
   The cruising speed can also be increased using the accelerator. When the desired speed is reached, press the button to set and maintain the new speed.

   Note: *Cruise control can only be engaged at speeds above 32 km/h (20 mph).*
2. **RES**: Press to resume the set speed.

RES should be used only if the driver is aware of the set speed and intends to return to it.

3. Press to decrease the set speed.
4. **CANCEL**: Press to cancel but retain the set speed in memory.
   Cruise control will also be cancelled if:
   - The brake pedal is pressed.
   - The gear selector is moved to Neutral (**N**) or Reverse (**R**).
   - HDC or DSC are activated.
   - The Electric parking brake (EPB) is applied.

The system is operated by controls mounted on the steering wheel. The driver can also intervene at any time by use of the brake or accelerator pedals.

Note: *If the accelerator pedal is pressed to over-ride cruise control for a period of more than 5 minutes, cruise control will be cancelled.*

ADAPTIVE CRUISE CONTROL OVERVIEW

The Adaptive Cruise Control (ACC) system is designed to maintain a gap from the vehicle ahead or a set road speed if there is no slower vehicle ahead. A speed may be set at between 32 km/h (20 mph) and 200 km/h (124 mph).

The system acts by regulating the speed of the vehicle, using engine control and the brakes.

ACC is not a collision warning or avoidance system. Additionally, ACC will not react to:

- **Stationary or slow moving vehicles below 10 km/h (6 mph).**
- **Pedestrians or objects in the roadway.**
- **Oncoming vehicles in the same lane.**

The ACC system uses a radar sensor, which projects a beam directly forward of the vehicle to detect objects ahead.

The radar sensor is mounted at the front of the vehicle behind the duct in the lower cooling aperture, to provide a clear view forward for the radar beam.

- Use ACC only when conditions are favourable, i.e. main roads with traffic moving in lanes.
- Do not use during abrupt or sharp turns, e.g., traffic islands, junctions, areas with many parked vehicles or areas shared with pedestrians.
- Do not use in poor visibility, specifically fog, heavy rain, spray or snow.
- Do not use on icy or slippery roads.
- It is the drivers responsibility to stay alert, drive safely and be in control of the vehicle at all times.
- Keep the front of the vehicle free from dirt, metal badges or objects, including vehicle front protectors, which may prevent the radar sensor from operating.

USING ACC

The system is operated by controls mounted on the steering wheel. The driver can also intervene at any time by use of the brake or accelerator pedals.

Setting the vehicle speed, activating and deactivating ACC, is done in the same way as when using Cruise control. See **125, USING CRUISE CONTROL**.

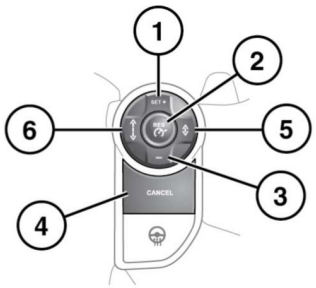

E139164

1. **SET+**: Press to increase or set the speed.
2. **RES**: Press to resume the set speed.
3. Press to decrease the set speed.
4. **CANCEL**: Press to cancel but retain the set speed in memory.
5. Press to decrease the follow mode gap.
6. Press to increase the follow mode gap.

See **126, ENTERING FOLLOW MODE**

ENTERING FOLLOW MODE

When in follow mode, the vehicle may not decelerate automatically to a stop, nor will the vehicle always decelerate quickly enough to avoid a collision.

Note: *Follow mode is an integral function of ACC. You cannot disengage follow mode and still use cruise control to maintain your speed.*

Once a set speed has been selected, the driver can release the accelerator and the set road speed will be maintained.

If a vehicle ahead enters the same lane or a slower vehicle is ahead in the same lane, your vehicle speed will adjust automatically until the gap to the vehicle ahead corresponds to the gap setting. The vehicle is now in **follow mode**.

The follow mode warning lamp will illuminate to confirm follow mode is operational (see **51, FOLLOW MODE (AMBER)**).

The message centre will display the gap set in the form of a vehicle with a varying number of bars in front of it.

The vehicle will then maintain the constant time gap to the vehicle ahead until:

- The vehicle ahead accelerates to a speed above the set speed.
- The vehicle ahead moves out of lane or out of view.
- A new gap setting is chosen.

If necessary, the vehicle brakes will be automatically applied, slowing the vehicle and maintaining the gap to the vehicle in front.

The maximum braking which is applied by ACC is limited and can be overridden by the driver applying the brakes, if required.

Note: *Driver braking will cancel ACC.*

If ACC predicts that its maximum braking level will not be sufficient, then an audible warning will sound while ACC continues to brake. **DRIVER INTERVENE** will be displayed in the message centre. Take immediate action.

When in follow mode, the vehicle will automatically return to the set speed when the road ahead is clear, for instance when:

- The vehicle ahead accelerates to a speed above the set speed, or changes lane.
- You change lane to either side or enter an exit lane.

The driver should intervene if appropriate.

If a direction indicator is used, ACC will reduce the gap to the vehicle ahead so as to respond more quickly to the anticipated manoeuvre. If a manoeuvre is not actioned, the previous gap will be restored after a few seconds. Enhanced response may not occur if ACC detects that it is inappropriate, i.e., you are already too close to the vehicle ahead or you are already in another lane.

CHANGING THE FOLLOW MODE SET GAP

It is the driver's responsibility to select a gap appropriate to the driving conditions.

Four gap settings are available. The selected gap setting is displayed on the message centre when the gap adjustment buttons are operated.

Each gap is indicated by an additional bar in front of the vehicle icon in the message centre. After the ignition is switched on, the default gap (gap 3) will be automatically selected ready for ACC operation.

If Terrain response Grass-Gravel-Snow mode is selected then the longest gap (gap 4) will initially be selected.

OVERRIDING THE SPEED AND FOLLOW MODE

Whenever the driver is overriding the ACC by depressing the accelerator pedal, the ACC will not automatically apply the brakes to maintain separation from any vehicle ahead.

The set speed and gap can be overridden by depressing the accelerator pedal while cruising at constant speed or in Follow mode. If the vehicle is in Follow mode when the ACC is overridden, the Follow mode warning lamp will go out and **CRUISE OVERRIDE** will be displayed in the message centre. When the accelerator is released the ACC function will operate again and vehicle speed will decrease to the set speed, or a lower speed if Follow mode is active.

QUEUE ASSIST

Queue assist is an enhancement of Adaptive cruise control and, when active, will follow a vehicle ahead to a standstill. It is intended for use in lines of traffic on major roads where minimal steering is required.

If a vehicle ahead slows to a halt, Queue assist will bring the vehicle to a stop and hold it stationary.

While the vehicle is held stationary, Queue assist will request the Electric park brake (EPB) to apply if:

- The driver cancels Queue assist.
- The vehicle is stopped for more than 2 minutes.
- Driver intention to exit the vehicle is detected.
- A malfunction is detected.

As the vehicle ahead moves away, a brief press on the accelerator will resume ACC operation.

At very low speed Queue assist may stop for stationary objects, e.g., when the vehicle ahead changes lane to reveal a stationary object. The vehicle radar cannot always distinguish between a stationary vehicle and a fixed object like a road sign, drain cover or temporary barrier. This may cause unexpected braking or cancellation and the driver should intervene if appropriate.

ACC AUTO OFF

ACC will disengage, but not clear the memory when:

- The **CANCEL** button is pressed.
- The brake pedal is pressed.
- Neutral (**N**) is selected.
- Dynamic Stability Control (DSC) activates.
- Electronic Traction Control (ETC) activates.
- Hill Descent Control (HDC) is selected.

ACC will disengage, and clear the memory when:

- The ignition system is switched off
- Maximum vehicle speed is reached
- A fault occurs in the ACC system.

RESUMING THE SPEED AND FOLLOW MODE

RES should only be used if the driver is aware of the set speed and intends to return to it.

By pressing the **RES** button after ACC has been cancelled (e.g. after braking), ACC will become active again provided that the set speed memory has not been erased. The original set speed will be resumed (unless a vehicle ahead causes the Follow mode to become active) and the set speed will be displayed in the message centre. Queue assist may be resumed above 10 km/h (6 mph).

Note: *When the set speed is resumed, the rate of acceleration is influenced by the previously set Follow mode gap. A closer set gap will promote greater acceleration.*

Note: *When resuming a set speed while in a curve, acceleration is reduced. A more severe curve will reduce acceleration further. Remember that ACC and Queue assist are primarily for use when minimal steering is required.*

HINTS ON DRIVING WITH ACC

During some situations ACC may provide the driver with an indication that intervention is required.

An audible alarm will sound, accompanied by the message **DRIVER INTERVENE** in the message centre if ACC detects:

- A failure has occurred while the system is active.
- That using maximum ACC braking only is not sufficient.

Note: *ACC only operates when the gear selector is in Drive (**D**).*

Note: *When engaged, the accelerator pedal rests in the raised position. Fully release the pedal to allow normal ACC operation.*

Note: *When braking is applied by ACC, the vehicle brake lamps will illuminate.*

Note: *When Intelligent stop/start is fitted, it may operate during a Queue assist stop. Press the accelerator pedal for longer than normal to restart the engine and move off.*

DETECTION BEAM ISSUES

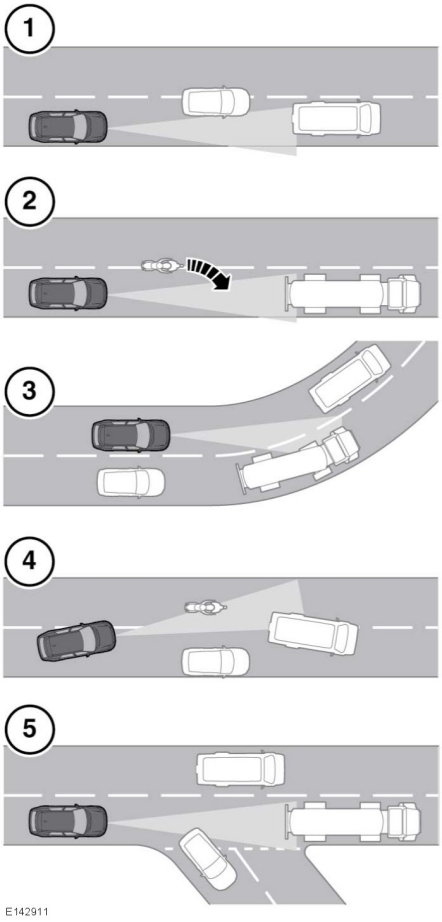

Detection issues can occur:

1. When driving on a different line to the vehicle in front.
2. When a vehicle edges into your lane. The vehicle will only be detected once it has moved fully into your lane.

3. There may be issues with the detection of vehicles in front when going into and coming out of a bend.
4. When moving around a stationary vehicle. This may cause uncertainty as to which vehicle should be followed.
5. When the vehicle ahead turns out of your lane. This may cause uncertainty as to which vehicle should be followed.

In these situations ACC may operate unexpectedly. The driver should stay alert and intervene if necessary.

ACC MALFUNCTION

If a fault occurs while ACC or Follow mode is operational, ACC will switch off and cannot be used until the fault is cleared. The message **DRIVER INTERVENE** is displayed briefly in the message centre and is then replaced by the message **CRUISE NOT AVAILABLE**.

If a fault with ACC or any related system occurs at any other time, the message **CRUISE NOT AVAILABLE** will be displayed. It will not be possible to activate ACC in any mode.

Accumulations of dirt, snow or ice on the radar sensor or cover may inhibit ACC operation. Fitting of a vehicle front protector or metallised badges may also affect ACC operation.

If this occurs in ACC cruise /Follow mode, the audible alarm sounds and the message **DRIVER INTERVENE** is displayed briefly. The message **RADAR SENSOR BLOCKED** will then be displayed.

Note: *The same messages may also be displayed while driving on open roads with few objects for the radar to detect.*

Clearing the obstruction allows the system to return to normal operation. If the obstruction is present when ACC is inactive (e.g. on initial starting or with ACC switched off), the message **RADAR SENSOR BLOCKED** will be displayed.

Tyres other than those recommended for your vehicle may have different circumferences. This can affect the correct operation of ACC.

FORWARD ALERT FUNCTION

⚠ **The system may not react to slow moving vehicles.**

⚠ **Forward alert uses the same radar sensor as Adaptive cruise control. The same performance limitations apply, see 126, ADAPTIVE CRUISE CONTROL OVERVIEW.**

Forward alert can be enabled/disabled via the Driver information centre menu. See **46, INSTRUMENT PANEL MENU**.

The warning lamp in the instrument panel illuminates when Forward alert is enabled (see **52, FORWARD ALERT (GREEN)**).

Forward alert provides limited detection and warning of objects close ahead while the vehicle is moving forwards. If a vehicle or object ahead is within the user defined sensitivity area, a warning tone will sound and the **FORWARD ALERT** message will be displayed in the message centre. Advanced emergency brake assist will be activated. See **131, ADVANCED EMERGENCY BRAKE ASSIST**

The driver must take appropriate action immediately.

Sensitivity of the function can be adjusted only when Adaptive cruise control is disengaged. Adjust as follows:

- Using the steering wheel Adaptive cruise control buttons, press the gap decrease button to display the current setting in the message centre and then press again to decrease the sensitivity of the alert.

- Press the gap increase button to display the current setting in the message centre and then press again to increase the sensitivity of the alert.

FWD ALERT <-----> is displayed in the message centre.

Note: *The Forward alert set gap is retained when the ignition is switched off.*

ADVANCED EMERGENCY BRAKE ASSIST

The system may not react to slow moving vehicles and will not react to stationary vehicles or vehicles travelling in the opposite direction.

Warnings may not appear if the distance to the vehicle ahead is very small or if steering wheel or pedal movements are large (e.g. to avoid a collision).

The system utilises the same radar sensor as Advanced cruise control and Forward alert - the same limitations of performance apply.

When Adaptive cruise control is fitted, Advanced emergency brake assist is available at speeds above approximately 7 km/h (5 mph) and will function even if Forward alert and Adaptive cruise control are switched off. It improves braking response during emergency braking, when a moving vehicle is detected close ahead.

If the risk of collision increases after the **FORWARD ALERT** warning is displayed, Advanced emergency brake assist is activated. The brakes are automatically applied gently in preparation for rapid braking (this may be noticeable). If the brake pedal is then pressed quickly, full braking is implemented, even if only light pressure is applied to the pedal. See **111, EMERGENCY BRAKE ASSIST (EBA)**.

Note: *Braking performance will only be improved if the driver applies the brakes.*

If there is a fault with the system, **FORWARD ALERT UNAVAILABLE** is displayed in the message centre. The vehicle can still be driven and the braking system will still operate, but without Advanced emergency brake assistance. Consult a Land Rover Dealer/Authorised Repairer to have the fault rectified.

INTELLIGENT EMERGENCY BRAKING

The system may not react to slow moving vehicles.

The system will not react to stationary vehicles or vehicles that are not travelling in the same direction as your vehicle.

Warnings and automatic braking may not occur if the distance to the vehicle ahead is very small, or if the steering wheel and pedal movements are large (e.g., to avoid a collision).

Intelligent emergency braking uses the same radar sensor as Adaptive cruise control and Forward alert. The same limitations of performance apply. See 126, ADAPTIVE CRUISE CONTROL OVERVIEW.

When Adaptive cruise control is fitted, Intelligent emergency braking (IEB) is available at all speeds and will function even if Adaptive cruise control and Forward alert are switched off. The purpose of IEB is to reduce the impact speed with a slower vehicle ahead when a collision becomes unavoidable.

Adaptive cruise control

If an imminent risk of collision occurs, an audible warning is given. If a collision becomes unavoidable, IEB will apply the brakes at up to maximum pressure. After IEB has activated, **IEB System Was Activated** is displayed in the message centre and the system is inhibited from further operation until reset by a Dealer/Authorised Repairer.

If the radar sensor is blocked, by snow or heavy rain for example, or there is a fault with the system, **IEB Not Available** is displayed in the message centre. The vehicle can still be driven and the braking system will still operate, but without IEB. If the radar sensor is not considered to be blocked, consult a Land Rover Dealer/Authorised Repairer.

TERRAIN RESPONSE OPERATION

E150019

Terrain Response selection is via a rotary control. There are 6 Terrain Response programs marked around the control.

Automatic mode determines and applies the most appropriate program for the conditions. If the rotary selector is in the elevated position, depress the selector to engage automatic mode.

Information relating to the suitability of each terrain response program on different types of surface, is given on the Touch screen, via the **Extra features** soft key. Touch the terrain response icon, then the information icon. The displayed text is relevant to the currently selected terrain response program.

GENERAL PROGRAM (SPECIAL PROGRAMS OFF)

This program is compatible with all on and off-road conditions.

If not already active, it should be selected before driving on surfaces which are similar to a hard road surface. Dry cobbles, tarmac, dry wooden planks, etc., all fall into this category.

This program should be selected once the need for a special program has passed. Once the special program has been deselected, all of the vehicle systems will return to their normal settings except HDC. HDC will remain active if it was selected manually.

GRASS/GRAVEL/SNOW

This program should be used where a firm surface is covered with loose or slippery material.

Note: *For deep gravel it is recommended that the Sand program is selected.*

Note: *If the vehicle is unable to gain traction in deep snow, switching DSC off may help. DSC should be switched on again, as soon as the difficulty is overcome.*

MUD-RUTS

This program should be used for crossing terrain that is muddy, rutted, soft or uneven.

Low range is recommended for this program and if not selected, the message centre will prompt you.

If the Mud-Ruts program and Low range are selected together, the vehicle ride height will be raised automatically.

SAND

This program should be used for terrain which is predominantly soft dry sand or deep gravel.

Note: *If the vehicle is unable to gain traction in extremely soft, dry sand, switching DSC off may help. DSC should be switched on again as soon as the difficulty is overcome.*

Terrain response

If the sand to be crossed is damp/wet, and sufficiently deep to cause the wheels to sink into the surface, the Mud-Ruts program should be used.

ROCK CRAWL

This program should be used for terrain which is predominantly rocky, including for crossing river beds with submerged rocks.

This program provides good low-speed control.

Rock crawl can only be selected in Low range. If the selection is made while in High range, the message centre will prompt you to select Low range.

DYNAMIC

This program is associated with a driving style, rather than a type of terrain and optimises traction, handling and driveability, for maximum feedback and responsiveness.

Select this program to exploit the vehicle's full on-road potential.

Note: *Dynamic mode automatically cancels if Low range is selected.*

DRIVER OVERRIDE OPTIONS

Hill Descent Control (HDC) is automatically engaged for some terrain response programs. If required, HDC can be deselected or engaged independently of terrain response. See **135, HDC CONTROLS**.

The HDC status will be displayed on the message centre whether it is engaged, or disengaged, by the system or by the driver.

Although Dynamic Stability Control (DSC) is automatically engaged when a special program is selected, it can be turned off if required. See **106, SWITCHING DSC OFF**.

SYSTEM DIFFICULTIES

Use of an incorrect program will impair the vehicle's response to the terrain and can reduce the life of the suspension and drive systems.

If the system becomes partially inoperable for any reason, it may not be possible to select special programs.

If a participating vehicle system becomes temporarily inoperable, the General program will be automatically selected. Once the system returns to normal operation, the previously active program will be re-activated unless the ignition has been turned off in the mean time.

If you try to select an inappropriate special program (e.g. selecting Rock crawl while in High range), the relevant indicator will flash amber and the message centre will provide further information. If the appropriate action is not taken within 60 seconds, the warnings will cease and the message centre will show the active program.

If the system becomes completely inoperable, all of the special program indicators will be switched off and a relevant message will be displayed in the message centre.

HDC CONTROLS

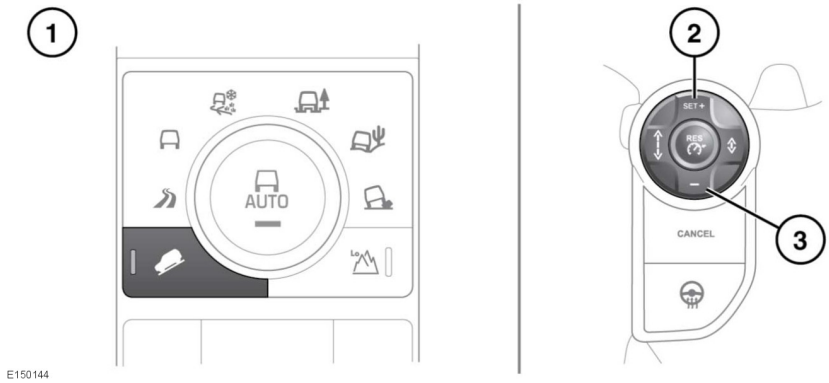

Do not attempt a steep descent if HDC is inoperative or warning messages are displayed.

1. HDC on/off.
   HDC can be selected at speeds below 80 km/h (50 mph) but will only operate at speeds of less than 50 km/h (31 mph). HDC can be used in Drive (**D**), Reverse (**R**) and all CommandShift gears. When in Drive (**D**), the vehicle will select the most appropriate gear.

Note: *HDC is automatically selected by some of the Terrain response special programmes.*
If the system's operational criteria have not been met, the HDC warning lamp will flash to indicate that the system has been selected, but is not operating. See **52, HILL DESCENT CONTROL (GREEN)**.
Once set, the HDC target speed will be indicated by a green marker on the speedometer.
If HDC is deselected while operating, the lamp will flash and the system will fade out, allowing the vehicle's speed to gradually increase.
If HDC is already selected and the vehicle speed exceeds 50 km/h (31 mph), HDC is suspended. The HDC indicator will flash and a message will appear in the Message centre.
If the vehicle's speed exceeds 80 km/h (50 mph) HDC will disengage and the HDC lamp will extinguish.
If the brake pedal is pressed when HDC is active, a pulsation might be felt through the brake pedal. When the brake pedal is released, HDC will resume.

Note: *HDC is automatically deselected if the ignition is switched off for more than 6 hours.*

2. Increase the descent speed.
   Each gear has a predetermined maximum speed.

   Note: *Vehicle speed will only increase on a slope steep enough to increase momentum. Use of the + switch may; therefore, not increase vehicle speed on a gentle slope.*

3. Decrease the descent speed.
   Each gear has a predetermined minimum speed.

If a fault is detected in the HDC system, **HDC FAULT SYSTEM NOT AVAILABLE** will appear in the message centre and HDC assistance will fade out.

If the fault is detected while the system is operating, HDC assistance will fade out. Contact a Dealer/Authorised Repairer as soon as possible.

GRADIENT RELEASE CONTROL (GRC)

With HDC activated, if the vehicle is stopped on a slope using the foot brake, GRC will become active (except in Terrain response Sand program). During a hill ascent when the foot brake is released GRC will automatically delay and graduate the brake release, to allow the vehicle to move smoothly away. When descending a hill, a similar brake hold and gradual release is employed to provide a smooth transition into HDC control.

GRC operates in forward and reverse gears and requires no driver intervention.

WARNING MESSAGES

⚠ **Do not attempt a steep descent if HDC is inoperative or warning messages are displayed.**

BRAKE TEMPERATURE

In extreme circumstances, the HDC system may cause brake temperatures to exceed their pre-set limits. If this occurs the warning **HDC TEMPORARILY UNAVAILABLE** will be displayed in the message centre. HDC will then fade out and become temporarily inactive.

Once the brakes have reached an acceptable temperature, the message will disappear (or the warning lamp will extinguish) and HDC will, if required, resume operation.

WADE SENSING CONTROLS

Wade sensing should not be used during off-road driving, as rapid increases in water depth cannot be detected in time to deliver a warning message to the driver.

The wade sensing system cannot detect the true level of water if a layer of ice or snow exists on the surface.

Parking aid will not operate when wade sensing is active.

The wade sensing sensors are located on the underside of the exterior mirrors. The sensors and the area below the sensors must be kept clean and free from snow, ice, mud and other debris. Failure to keep the sensors clean may result in sensor miscalculation.

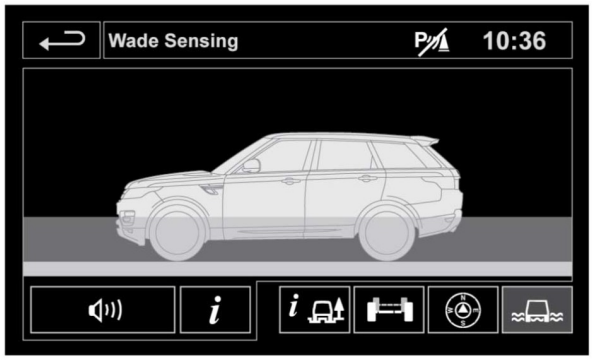

E151934

Wade sensing aids the driver while driving through water. Wade sensing can be turned on and off from the Touch screen **4x4i** or **Extra Features** menus. When selected, the Touch screen will display the current water depth and the maximum wading depth. The system will warn the driver as the maximum depth for wading approaches. Warnings take the form of messages on the Touch screen, the Instrument panel and a series of warning tones.

If system limitations are exceeded, the Touch screen view will grey out.

Wade sensing is suspended if the vehicle's speed exceeds 16 km/h (10 mph). Wade sensing will automatically reactivate if the vehicle's speed drops back down to 10 km/h (6 mph). If the vehicle's speed exceeds 30 km/h (19 mph) for 30 seconds, wade sensing will automatically switch off.

Note: *Wading performance is improved if the vehicle suspension is set to Off-road height. See* ***108, OFF-ROAD HEIGHT****.*

Note: *Wade sensing will not operate if the vehicle is fitted with Deployable side steps, Fixed side steps, or Side tubes, or if the exterior mirrors are in the fold position.*

Wade sensing

Note: *The Parking aid, Park assist and Intelligent stop/start systems are all disabled when wade sensing is operating.*

SURROUND CAMERA SYSTEM

The camera home page is accessed from **Extra features**. See **72, TOUCH SCREEN HOME**

MENU.

The camera hard key activates the Junction view if in non-reverse gears, or the reverse view if in reverse gear.

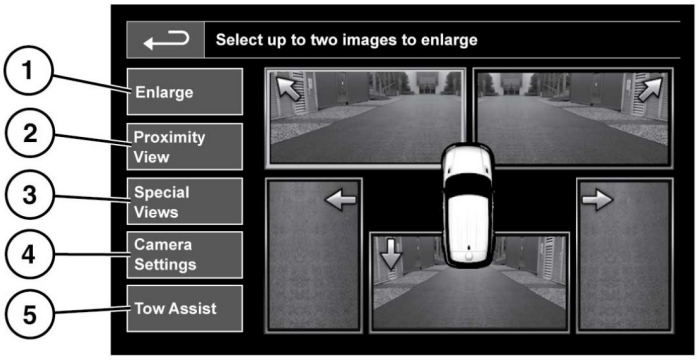

E151119

1. **Enlarge:** To enlarge a camera view, touch the image then touch the **Enlarge** soft key. Any 2 images can be selected and enlarged to view side-by-side on the screen.
   When viewing the two images, one of them can be selected to view as a full screen image. It can then be zoomed into and panned around using the magnifier and arrow icons.
2. **Proximity View:** Proximity view can be accessed by touching *Proximity View* on the *Camera* home page. Touch to select a combination of 3 images from the front and passenger side cameras.
   Automatic Proximity View - Japan only: When Drive or Reverse is selected, the forward or rear view will be displayed. Once the vehicle speed exceeds 18 km/h (11 mph) or the return icon is pressed, the camera screen will disappear.
3. **Special Views:** Touch to display a selection of pre-set views. They are provided to assist with difficult manoeuvres and are:
   - **Kerb view:** Shows views from the 2 side cameras.
   - **Junction view:** Shows views from the 2 side cameras.
   - **Trailer view:** When towing, shows the rear camera view.
4. **Camera Settings** - Japan only: Touch to access the camera options page. To deactivate the Semi-auto camera functionality select **Off**. The Proximity view is now only accessible by manual activation using the **Proximity View** soft key.
5. **Tow Assist:** Touch to display trailer guidance set-up screen.

TRAILER GUIDANCE

Note: *Trailer guidance requires a connected trailer to be fitted with a tracking target sticker, which* ***must*** *be attached according to specific instructions. Ask your Dealer/Authorised Repairer for details.*

E134952

Note: *This feature may not operate with all trailer designs.*

Trailer guidance aids trailer reversing, by displaying guidelines on the Touch screen.

Trailer guidance becomes active when a trailer/caravan is attached to the vehicle and the trailer electrical plug is attached to the vehicle socket.

Note: *The driver's door must be opened and closed after the trailer/caravan is connected to the electrical socket before the system will detect the connection.*

The screen will display a choice for connection. Select **YES** to move to the setup screen. Select **NO** to return to the previous screen.

Note: *If the connection is not detected, setup can be manually prompted by touching the Tow Assist soft key on the Camera menu.*

On first use, the setup screens take the user through a series of configuration options for the connected trailer. Information such as trailer length, number of axles and camera preference is required to finalise setup. Once completed, the details are stored for future use.

When a new or existing trailer configuration is selected, Trailer guidance automatically displays on the Touch screen when reverse gear is selected. Coloured lines are displayed to indicate the predicted path of both trailer and vehicle.

AUDIO/VIDEO CONTROLS

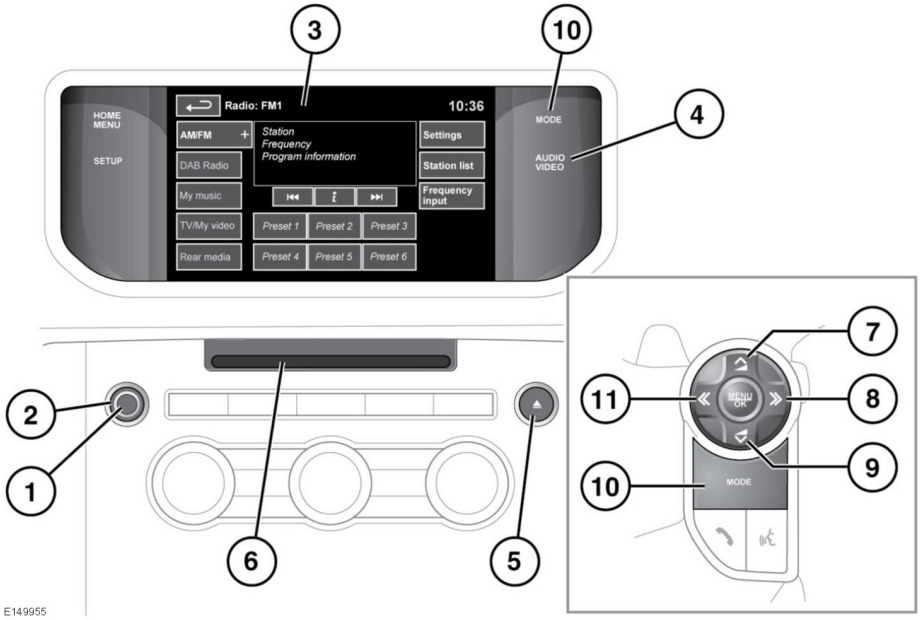

Sustained exposure to high sound levels (greater than 85 decibels) can damage your hearing.

1. Press to switch the audio system on/off.

   Note: *The audio system will operate with the ignition on or off, but will always switch off when the ignition is switched off. Switch the audio on again if required.*

2. Rotate to adjust volume level.

   Note: *If volume is turned to zero while a Compact Disc (CD) is playing, the CD will pause play. Play will resume when a greater volume is selected.*

3. Touch screen
4. **AUDIO VIDEO.** Press for direct access to the **Audio/Video** menu.
5. CD/Digital Versatile Disc (DVD) eject button.
6. CD/DVD loading slot.
   The player will accommodate 1 disc at a time, but up to 10 CDs can be uploaded into the CD store. Only Compact Disc Digital Audio (CDDA) discs can be uploaded into the CD store.
   Only discs with CDDA tracks and no other type, can be uploaded to the Stored CD store.
   Insert a disc into the loading slot until resistance is felt. The player mechanism will complete the loading.
7. Press to increase volume for any source.
8. Seek up:
   Short press:
   - To select the next radio preset.

- To select the next track on chosen audio source - CD, MP3 etc.
- when telephone is in use, press to scroll up lists of calls or phonebook entries.
- To select the next TV channel on the channel list or the next DVD chapter.

Long press:

- To auto seek up the frequency to the next radio station.

9. Press to decrease volume for any source.

10. MODE:

- Short press to scroll through all audio/video sources.
- Long press to scroll through audio/video source sub selections, e.g. In My music: iPod, Bluetooth, stored CD and CD.

11. Seek down:
Short press:

- To select the previous radio preset.
- To select the previous track or start of current track on chosen audio source - CD, MP3 etc.
- When telephone is in use, press to scroll down lists of calls or phonebook entries.
- To select the previous TV channel on the channel list or the previous DVD chapter.

Long press:

- to auto seek down the frequency to the next radio station.

AUDIO SETTINGS

To view the audio/video menu, press the audio video button or the **Audio settings** soft key on the Touch screen.

To adjust the sound settings:

1. Touch the **+** or **-** soft keys to adjust Bass, Treble or Subwoofer levels.
2. If **Meridian Surround** is fitted, touch **DPLIIx**, **DTS Neo:6**, **Meridian Trifield** or select **Stereo** to switch surround sound off
3. If **Meridian Signature Reference** is fitted, select **3D surround** and touch **DPLIIz**, **DTSNeo:X**, **Meridian Trifield 3D** to activate 3D surround mode.

Note: *Surround sound options are not available for certain sources where the surround sound mode is set automatically.*

To adjust balance and fade:

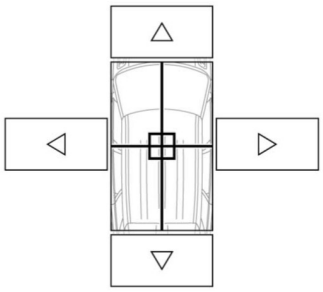

1. From the Sound settings menu, select **Balance/Fade**.
2. Touch the arrow soft keys to move the sound focal point to the desired area of the vehicle. Alternatively, touch the sound focal point and 'drag' it to the required position.

LOADING DISCS

Do not force the disc into the slot.

Do not use irregular shaped CDs or DVDs and those with a scratch protection film or self-adhesive label attached.

- The CD unit will play compact discs that conform to the international Red Book standard audio specification. Playback of CDs not conforming to this standard cannot be guaranteed.
- Recordable (CD-R) discs and re-writable (CD-RW) discs may not function correctly.
- Recordable (DVD-R or DVD+R) discs may not function correctly.
- Dual format, dual-sided discs (DVD Plus, CD-DVD format) are thicker than normal CDs and consequently playback cannot be guaranteed, and jamming may occur.

It is recommended that only high quality 12 cm (4.7 in.) circular discs are used.

The unit will play Compact Disc Digital Audio (CDDA) discs, MP3, WMA, WAV and AAC files.

The CD/DVD player will accommodate one CD or DVD disc at a time but up to 10 CDs can be uploaded onto the virtual store.

Only CDDA discs can be loaded into the virtual CD store.

LICENSING

DOLBY DIGITAL

E135227

DOLBY PRO LOGIC IIz

E145345

E145346

DOLBY PRO LOGIC IIx

E132539

Manufactured under license from Dolby Laboratories.

Dolby, Pro Logic, and the double-D symbol are registered trademarks of Dolby Laboratories.

dts™ Digital Surround | Neo:6

E132540

dts™ Digital Surround | Neo:X

E145347

Manufactured under license under U.S. Patent #'s: 5,451,942; 5,956,674; 5,974,380; 5,978,762; 6,487,535; 7,003,467 & other U.S. and worldwide patents issued & pending. DTS, the Symbol, and Neo:6 are registered trademarks, & DTS Digital Surround and the DTS logos are trademarks of DTS, Inc. Product includes software. © DTS, Inc. All Rights Reserved.

E132541

E132542

Manufactured under license under U.S. Patent #'s: 5,451,942; 5,956,674; 5,974,380; 5,978,762; 6,487,535 & other U.S. and worldwide patents issued & pending. DTS and the Symbol are registered trademarks, & DTS 2.0+ Digital Out and the DTS logos are trademarks of DTS, Inc. Product includes software. © DTS, Inc. All Rights Reserved.

E132543

DivX Certified® to play DivX® video.

DivX®, DivX Certified® and associated logos are registered trademarks of DivX, Inc. and are used under license.

ABOUT DIVX VIDEO: DivX® is a digital video format created by DivX, Inc. This is an official DivX Certified device that plays DivX video. Visit www.divx.com for more information and software tools to convert your files into DivX video.

ABOUT DIVX VIDEO-ON-DEMAND: This DivX Certified® device must be registered in order to play DivX Video-on-Demand (VOD) content. To generate the registration code, locate the DivX VOD section in the device setup menu.

1. Follow the route, Home Menu - Audio Video - TV/My video - Settings - VOD.
2. An eight digit code will be displayed. This is your unique DivX code. Make a note of this code and keep it for future reference.

Go to http://vod.divx.com with this code to complete the registration process and learn more about DivX VOD.

Covered by one or more of the following U.S. Patents: 7,295,673; 7,460,668; 7,515,710; 7,519,274.

E132544

Music and video recognition technology and related data are provided by Gracenote®. Gracenote is the industry standard in music recognition technology and related content delivery. For more information, please visit www.gracenote.com.

CD, DVD, Blu-ray Disc, and music and video-related data from Gracenote, Inc., copyright © 2000 to present Gracenote. Gracenote Software, copyright © 2000 to present Gracenote. One or more patents owned by Gracenote apply to this product and service. See the Gracenote website for a non-exhaustive list of applicable Gracenote patents. Gracenote, CDDB, MusicID, MediaVOCS, the Gracenote logo and logotype, and the "Powered by Gracenote" logo are either registered trademarks or trademarks of Gracenote in the United States and/or other countries.

Japan only

This product uses copyright protection technology, and Rovi corporation and other copyright holders are protected by the patent laws of the United States and other intellectual property rights. Use of this copyright protection technology requires authorization from Rovi corporation. Further, without special authorization from Rovi corporation, use is restricted to the home and other private appreciation. Reverse engineering and disassembly are prohibited.

GRACENOTE® END USER LICENSING AGREEMENT

This application or device contains software from Gracenote, Inc. of Emeryville, California ("Gracenote"). The software from Gracenote (the "Gracenote Software") enables this application to perform disc and/or file identification and obtain music-related information, including name, artist, track, and title information ("Gracenote Data") from online servers or embedded databases (collectively, "Gracenote Servers") and to perform other functions. You may use Gracenote Data only by means of the intended End-User functions of this application or device.

You agree that you will use Gracenote Data, the Gracenote Software, and Gracenote Servers for your own personal non-commercial use only. You agree not to assign, copy, transfer or transmit the Gracenote Software or any Gracenote Data to any third party. YOU AGREE NOT TO USE OR EXPLOIT GRACENOTE DATA, THE GRACENOTE SOFTWARE, OR GRACENOTE SERVERS, EXCEPT AS EXPRESSLY PERMITTED HEREIN.

You agree that your non-exclusive license to use the Gracenote Data, the Gracenote Software, and Gracenote Servers will terminate if you violate these restrictions. If your license terminates, you agree to cease any and all use of the Gracenote Data, the Gracenote Software, and Gracenote Servers. Gracenote reserves all rights in Gracenote Data, the Gracenote Software, and the Gracenote Servers, including all ownership rights. Under no circumstances will Gracenote become liable for any payment to you for any information that you provide. You agree that Gracenote, Inc. may enforce its rights under this Agreement against you directly in its own name.

The Gracenote service uses a unique identifier to track queries for statistical purposes. The purpose of a randomly assigned numeric identifier is to allow the Gracenote service to count queries without knowing anything about who you are. For more information, see the web page for the Gracenote Privacy Policy for the Gracenote service.

The Gracenote Software and each item of Gracenote Data are licensed to you "AS IS." Gracenote makes no representations or warranties, express or implied, regarding the accuracy of any Gracenote Data from in the Gracenote Servers. Gracenote reserves the right to delete data from the Gracenote Servers or to change data categories for any cause that Gracenote deems sufficient. No warranty is made that the Gracenote Software or Gracenote Servers are error-free or that functioning of Gracenote Software or Gracenote Servers will be uninterrupted. Gracenote is not obligated to provide you with new enhanced or additional data types or categories that Gracenote may provide in the future and is free to discontinue its services at any time.

RADIO CONTROLS

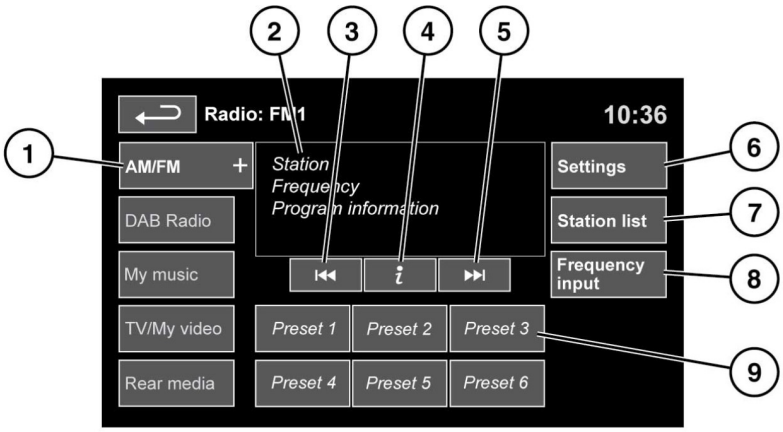

E149957

1. **AM/FM**: Waveband selection. Touch to view and select a waveband. The radio will tune to the last used station on that waveband. Touch again to close.
   The waveband selection box will close automatically after 5 seconds without use.
2. Displays information about the current station.
3. Seek down:
   - Short touch to auto seek down the frequency to the next radio station.
   - Long touch to activate manual seek mode. Further short touches change the frequency in single decrements. A further long touch will scan backwards through the current waveband until the soft key is released.

     Note: *When manual seek is selected, auto seek cannot be selected for approximately 10 seconds.*
4. Information. More information from the broadcasting station.
5. Seek up:
   - Short touch to auto seek up the frequency to the next radio station.
   - Long touch to activate manual seek mode. Further short touches change the frequency in single increments. A further long touch will scan forwards through the current waveband until the soft key is released.
6. **Settings**: Touch to view and activate/deactivate the following features: **RDS**, **Traffic**, **News**, **AF** and **REG**. See **148, RADIO DATA SYSTEM (RDS)**.
7. **Station list** (FM only): Select to view a list of available stations on the waveband. The list can be sorted by **Frequency**, **Name** or **PTY** (pop, news, sport etc.) by selecting the appropriate soft key. Touch to select the chosen station.
   If the stations are sorted by category, touch the chosen category to view and select a corresponding station.

8. **Frequency input**: Select to enter a known frequency of a station on the current waveband, using the numeric keypad that appears. Select OK or wait for 2 seconds to tune to the entered frequency.
9. **Station presets**: Each waveband has 6 preset positions.
   - Touch and release to tune to the station stored on that preset.
   - Touch and hold to store the current station on that preset (the radio will mute while the station is stored then beep).
   - Use the seek buttons on the steering wheel to change to the next or previous preset station.

RADIO DATA SYSTEM (RDS)

Your radio is equipped with RDS which enables the audio unit to receive additional information with normal FM radio signals.

Note: *Not all FM radio stations broadcast RDS information.*

Select **Settings** to view or alter RDS settings.

- **Traffic/News**: Provides local travel or news information.
- **Regionalisation (REG)**: Select to prevent the radio tuning into an alternative local station that has a stronger signal.
- **Alternative Frequency (AF)**: Select to allow the radio to automatically re-tune to a stronger alternative frequency for the current station. This is useful on a journey where the vehicle travels through different transmitter areas.

DAB RADIO CONTROLS

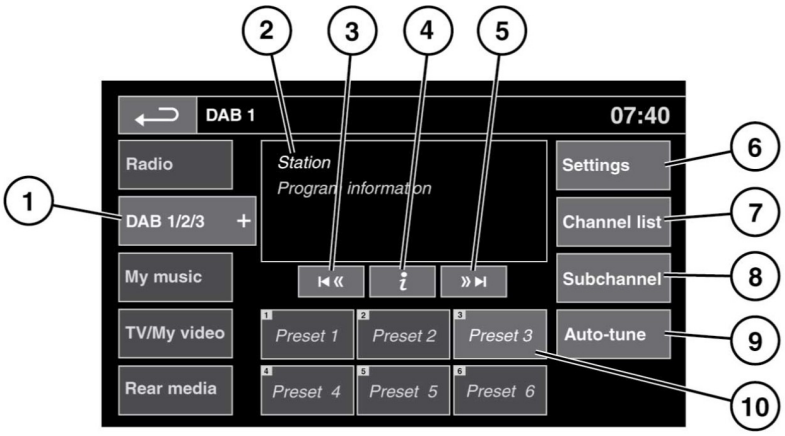

Note: *Some types of body mounted accessories (for example, external luggage compartment stowage devices) may affect the performance of this system.*

1. **DAB 1/2/3**: Touch to view and select a DAB band (**DAB 1**, **2** or **3**). The radio will tune to the last used channel on that band. Touch again to close.
2. Display showing the current channel, the associated Ensemble and relevant DAB radio text.
3. Seek down:
   - Short touch to seek previous available channel.
   - Long touch to seek previous available Ensemble. The first channel in the new Ensemble will be selected.
4. Channel information: Touch to view DAB text and channel information.
5. Seek up:
   - Short touch to find the next available channel.
   - Long touch to find the next available Ensemble. The first channel in the new Ensemble will be selected.
6. **Settings**: Touch to view the DAB Settings menu:
   - **Options**: To activate/deactivate FM Traffic and Link DAB and to alter DAB country and format settings (with the vehicle stationary).
   - **Announcements**: Select an alarm announcement and up to 3 other announcement types (traffic, news etc.) from the list. The selected announcements will interrupt the current programme when broadcast.
7. **Channel list**: Touch to view a list of available Ensembles and channels. The list can be sorted by **Ensemble**, **Channel**, **Subchannel** or by **Category**.
   - If an **Ensemble** is selected from the list, all available channels from that ensemble will be displayed.

- Sorting by **Subchannel** is only available when the current channel is broadcasting subchannels.
- If **Category** is selected, touch the chosen category to view corresponding channels, before making your selection from the list.

Once the desired selection has been made, select the Back soft key to return to the main DAB menu.

8. **Subchannel**: If subchannels are broadcast by the current channel, this soft key will be active. Select to allow subchannels, then select the required subchannel with the seek down/up keys.
9. **Auto-tune**: Select to scan for all available DAB Ensembles/channels. This needs to be done before using the DAB radio for the first time.
   Auto-tune is also useful when travelling long distances, so regional Ensembles can be tuned.
   During Auto-tune, a pop-up shows tuning progress.
   The Auto-tune process will not affect current presets, but some presets may not operate if the channel they relate to is no longer available (**No reception** displays).
10. Station presets: Each DAB band has 6 preset positions.
    - Touch and release to tune the radio to the station stored on that preset.
    - Touch and hold to store the current station on that preset (the radio will mute while the station is stored).
    - Use the seek buttons on the steering wheel to select the next or previous preset station.

    Note: *If you attempt to select a preset channel that is now unavailable or invalid,* ***No reception*** *is displayed.*

DAB RADIO SETTINGS

In **Settings**:

- If the **Link DAB** setting is switched on and the signal strength for a channel falls below an acceptable level, the audio unit will automatically search other available ensembles for a channel with the same name.
  If an alternative local channel is found, the new channel is played automatically after few seconds. If the channel is not found after a few seconds, the message **No reception** is displayed.
  The word **Link** is displayed at the top of the Touch screen when **Link DAB** is enabled.
- Select **DAB country** if driving into another country. Scroll through the country options to choose the appropriate one. This will prompt an auto tune.

  Note: *This option is disabled while the vehicle is moving.*
- Choose **DAB format** if moving to a region that uses a different digital band. Available formats are:
  - L Band
  - Band III
  - L Band & Band III
  - L Band Canada
  - L Band Can & Band III

  This will prompt an auto tune.

  Note: *This option is disabled while the vehicle is moving.*

ENSEMBLES

Unlike AM/FM radio, DAB transmits several channels/stations on a single frequency. A group of channels is known as an ensemble. Some channels within the ensemble may have subchannels offering several listening options.

If reception is lost when the vehicle is in motion, the vehicle may be out of range of the ensemble. To build a new list of ensembles, select **Auto-tune**.

PORTABLE MEDIA CONTROLS

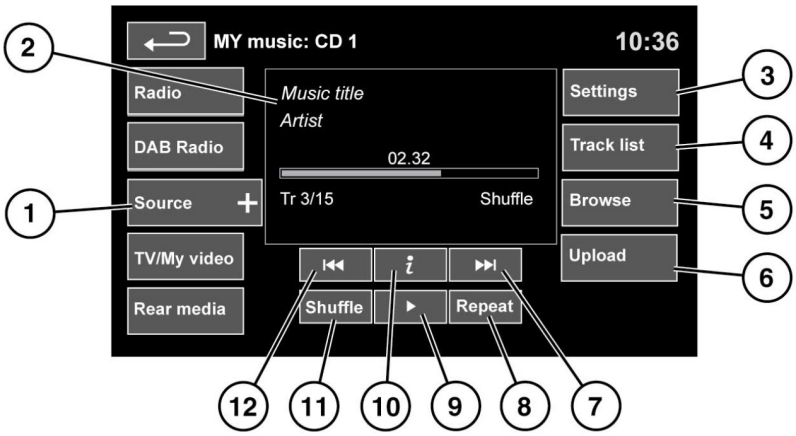

E151174

Do not adjust the main audio unit's controls, or allow the system to distract the driver while the vehicle is moving. Driver distraction can lead to accidents, causing serious injury or death.

Sustained exposure to high sound levels (greater than 85 decibels) can damage your hearing.

See **141, AUDIO/VIDEO CONTROLS**.

My Music includes CD, iPod, USB, AUX and **Bluetooth**® wireless technology devices. The full infotainment system also includes Stored CD.

1. Touch the **Source** icon to display all options. Select an option.

   Note: *Sound quality and volume levels available from devices connected to the auxiliary input may vary widely.*

2. Display of information about the current track, including elapsed run-time. Some of this information is also displayed in the instrument panel.

   Note: *Only connected devices that support ID3 shall have the information displayed.*

3. **Settings**: Select to switch traffic and news announcements on or off. Additionally, for MP3 recorded media, you can select the number of list entries that are skipped when you use the page up/down arrows when navigating a list.
4. **Track list**. Select to view current CD or Stored CD track list. Select a track to start playback.
5. **Browse**. (iPod, USB and Stored CD modes only).
   - Select to view the contents of the connected device which are displayed as dictated by the file structure.
   - Select a file to start playback (Browse view will remain). Select a folder or subfolder to view their contents.

- To return to the Controls menu, select the Back soft key.

  Note: *If the iPhone is connected via a USB cable so that audio can be played or for phone charging,* ***Bluetooth*** *wireless technology devices audio is disconnected.*

6. **Upload**: Applicable to Stored CD menu only. Select to view and manage the CDs loaded onto the CD store.
   - Select **Upload** alongside an empty slot to upload the current CD. There are 10 slots available.
   - If the CD store is full, select **Replace** to overwrite an existing CD.

   In each case a confirmation pop-up will appear. Select **Yes** to continue.

   Note: *Loading time is dependent on content type. A % count up is displayed. Other features can be selected while upload is in progress.*
7. Skip/Scan forward:
   - Touch and release to skip to the next track.
   - Touch and hold to scan forwards through the current track. Play will resume when the soft key is released.
8. Repeat:
   In **CD** mode
   - Touch and release to repeat the current track continuously until Repeat mode is cancelled. **Repeat track** is displayed.
   - Touch and release again to repeat the current Stored CD (or folder for MP3 discs) continuously until Repeat mode is cancelled. **Repeat disc** or **Repeat folder** is displayed.
   - Touch and release a third time to cancel Repeat mode.

   Note: *Selecting* ***Shuffle*** *will cancel Repeat mode, but* ***Repeat track*** *can be selected with Shuffle mode active (cancels the previously selected shuffle mode).*
   In **USB** or **iPod** mode
   - Select to repeat the current track.
   - Select again to repeat the current folder (USB) or to cancel repeat mode (iPod). Select again to cancel repeat mode in USB.

   Note: *Repeat mode is not available for* ***Bluetooth®*** *wireless technology devices.*

   Note: *Selecting* ***Shuffle*** *will cancel Repeat mode.*
9. Pause/Play: Select to pause playback. Select again to resume playback.
10. Information. More information about the current track.
11. Shuffle:
    - Touch and release once to play random tracks from the current CD, MP3 folder, USB folder or iPod playlist. A **Shuffle** message is displayed.
    - Touch and release again to play random tracks from CD, MP3 disc, USB folders or tracks on the media device or tracks loaded onto the CD store. **Shuffle all** is displayed.
    - Touch and release again to cancel Shuffle mode

    Note: *Shuffle mode is not available for* ***Bluetooth®*** *wireless technology devices.*
12. Skip/Scan backward:
    - Touch and release within 3 seconds of track playback to skip to the previous track.
    - Touch and release after 3 seconds of track playback to skip to the beginning of the current track.

- Touch and hold to scan backwards through the current track. Playback will resume when the soft key is released.

PORTABLE MEDIA CONNECTIONS

Portable media devices can be connected to the media hub located in the cubby box. Rear seat passengers can connect at the rear of the centre console. Compatible portable devices include:

- USB mass storage devices (e.g. a memory stick). Devices must use FAT or FAT32 file format.
- iPod (iPod Classic, iPod Touch, iPhone and iPod Nano are supported - full functionality for older devices cannot be guaranteed). iPod Shuffle functionality cannot be guaranteed.
- Auxiliary device (personal audio, MP3 players, all iPods).

  Note: *Auxiliary devices have no Touch screen control.*

If you are connecting an iPod, mass storage or **Bluetooth**® wireless technology device, use the Touch screen to operate and search the device. Many of the controls are similar to those available for CD play.

Please disconnect your iPod when leaving the vehicle. Failure to do so may result in the iPod battery discharging.

Note: *The audio system will play MP3, WMA and AAC files.*

To maximise playback quality, it is recommended that lossless compression is used for any media files on USB or iPod. Failing this, it is recommended that compressed files utilise a minimum bitrate of 192 kb/s (a higher bitrate is strongly recommended).

Note: *iPod is a trademark of Apple Computer Inc., registered in the US and other countries.*

Note: *Some MP3 players have their own file system that is not supported by this system. To use your MP3 player, you must set it to USB Removable Device or Mass Storage Device mode. Only music that has been added to the device in this mode can be played.*

For a list of compatible **Bluetooth** wireless technology devices, please refer to the Land Rover website at www.landrover.com.

The **Bluetooth** wireless technology devices listed have been tested for compatibility with Land Rover vehicles. Performance will vary, based on the device's software version and battery condition. Devices are warranted by their manufacturer, not Jaguar Land Rover Limited.

CONNECTING A DEVICE

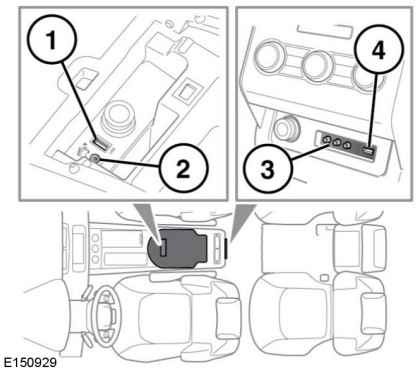

Read the manufacturer's instructions for any device, before it is connected to the audio system. Make sure the device is suitable and comply with any instructions regarding connection and operation. Failure to do so may result in damage to the vehicle's audio system or the auxiliary device.

Connect the device into the appropriate socket.

1. USB sockets.

2. 3.5 mm AUX socket.
3. Rear media AV sockets.
4. Rear media USB/iPod socket.

Do not plug non-audio devices into the USB port.

Note: *Use the cable supplied with your media device to connect to the USB socket.*

Note: *A USB hub cannot be used to connect more than one USB device to the audio unit.*

Note: *Devices connected to the USB ports will be charged, but devices that are fully discharged will not play.*

Note: *In some cases if an iPhone is connected via a USB cable for music and also to a* ***Bluetooth*** *wireless technology device for other phone functions, the audio will stream through only the last connected port. For example if a* ***Bluetooth*** *wireless technology device is the last connection made to the iPhone and the iPod lead is connected, no audio will be heard through the speakers via the iPod lead. Track title and time information will still be shown on the display. Audio output from the speakers will only be obtained if the user chooses audio mode on the* ***Bluetooth*** *wireless technology device. To address this issue disconnect and reconnect your device's USB cable or open the iPod application on the iPhone, select the* ***Bluetooth*** *icon and select Dock Connector on the pop up."*

When an iPod is connected, playback will continue from the point at which it was last playing, provided the iPod battery is in a good state of charge.

Note: *Options such as* ***Repeat*** *and* ***Mix*** *relate to the device currently playing, they will not apply to any subsequent device.*

The 3.5mm AUX socket allows additional equipment (e.g. personal stereos MP3 player, hand-held navigation unit, etc.) to be connected to the audio system.

Note: *iPod shuffle may be connected via the AUX socket.*

Note: *On vehicles fitted with rear seat entertainment, additional Audio/Visual sockets are provided. This allows auxiliary equipment (such as a video game console) to be linked to the rear DVD screens. For installation information, please refer to the manufacturer's instructions.*

PLAYING A PORTABLE DEVICE

If you are using a USB mass storage device or approved iPod, you can control playback using the Touch screen controls.

If you are using a Bluetooth® device, you can control playback using the Touch screen, but some controls are unavailable.

If you are using any portable media device via the AUX socket, then you must control playback from the device itself.

Land Rover does not recommend the use of a Hard Disc Drive via the USB link while the vehicle is in motion. These devices are not designed for in car use and may be damaged.

CONNECTING MULTIPLE DEVICES

Do not plug non-audio devices into the USB port.

You can connect multiple devices simultaneously to the portable media interface and switch between them using the Touch screen. Select **iPod**, **USB**, **Bluetooth** or **AUX**, to switch between modes.

The device docked first will remain the active device until you choose to change.

If, after changing to the newly-docked device, you change back to the first device, play will resume at the point you left it (USB and iPod only).

Note: *You cannot use a USB hub to connect more than one USB device to the audio unit.*

Note: *Devices connected to the iPod and USB ports will be charged, but devices that are fully discharged will not play.*

Note: *Options such as **Repeat** and **Shuffle** relate to the device currently playing, they will not apply to any subsequent device.*

PAIRING AND CONNECTING USING THE MEDIA PLAYER

For further information on **Bluetooth**® wireless technology, see **171, BLUETOOTH® INFORMATION**.

Note: *The process of pairing and connecting your media device with the vehicle, using the media device, will vary depending on the type of media device.*

1. Switch on the ignition and make sure the Touch screen is active.
2. From the Home menu, select **Audio/Video**, then **My music +** soft key.
3. Touch **Bluetooth**.
4. A menu will appear. Select **Change device**.
5. Select **Device to vehicle** option.

   Note: *The vehicle's **Bluetooth** wireless technology system is only discoverable for 3 minutes.*
6. Using the media device, search for **Bluetooth** wireless technology devices. On some media devices, this is referred to as new paired device. See your media device's operating instructions for further information.
7. When the vehicle's **Bluetooth** wireless technology system is discovered, follow the on-screen instructions. Select **Yes** when prompted, to confirm the pairing.
   Either your device or the vehicle system will ask for a PIN (Personal Identification Number). When prompted, enter a PIN of your choice and select **OK** to confirm.
8. Enter the same PIN into the other device.
9. Once your device is paired and connected to the system, a confirmation message will be displayed, before switching to the **My music**, **Bluetooth** screen.

   Note: *Some media devices do not automatically connect and need to be manually connected, via the device or by using the **Change device** option.*

PORTABLE MEDIA PAIRING AND CONNECTING USING THE TOUCH SCREEN

For further information on **Bluetooth**® wireless technology, see **171, BLUETOOTH® INFORMATION**.

1. Switch on your device's **Bluetooth** connection. Make sure that it is in **Bluetooth** discoverable mode, sometimes referred to as find me mode (see your device's operating instructions for more information).
2. Switch on the ignition and make sure the Touch screen is active.
3. From the Home menu, select **Audio/Video**, then **My music**.
4. Touch **Bluetooth**.
5. A menu will appear. Select **Change device**.
6. Select **Vehicle to device** option.
7. Identify your device from the displayed list and select the corresponding **Pair and connect** option.

Note: *If more than 5 devices are detected, it may be necessary to use the scroll bar to see the entire list.*

8. When prompted, enter the PIN (Personal Identification Number) code into your device. See your device's operating instructions for more information.
9. Once your device is paired and connected to the system, a confirmation message will be displayed before switching to the **My music**, **Bluetooth** view.

Note: *Due to the duration of a* ***Bluetooth*** *wireless technology device search, it is advised that the time-out to home screen feature is switched off before attempting to search for* ***Bluetooth*** *wireless technology devices. This setting can be changed within* ***Set-up***, ***Screen***, ***Time out home***.

CHANGING/DISCONNECTING A DEVICE

1. From the menu, select **Change device**.
2. Select **Disconnect**. A confirmation pop-up will appear and then you will be given the option to **Search new** or select a different device from the list of paired devices.

TELEVISION CONTROLS

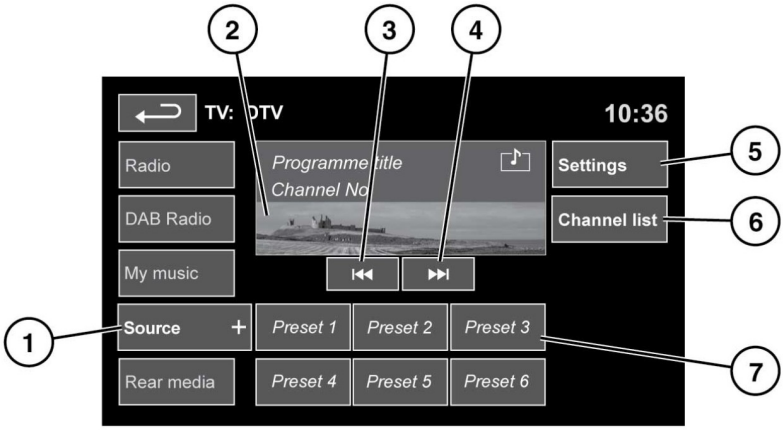

E151176

1. TV/My video. TV band/video input selection:
   - Touch **Source** to view and select either digital (**DTV 1** or **DTV 2 - Digital**) or analogue (**TV - Analogue**) TV reception, CD/DVD, USB or iPod.

     When changing between analogue and digital bands, this will cause the last tuned channel on the new band to be displayed. When changing between digital bands, the current channel will be displayed.

   Note: *After 5 seconds without use, the TV/My video menu will close.*
2. Preview screen for TV programme: Touch to select full screen mode.
   Short touch the screen again to view the controls and Electronic Programme Guide (EPG) information at any time.
   To return to preview mode, touch and hold the full screen view.
3. Seek down: Select to view the previous channel on the TV channel list.
4. Seek up: Select to view the next channel on the TV channel list.
5. **Settings**: Select to switch Traffic and News announcements on or off, to select analogue TV or to select an alternative country analogue TV format, if necessary, when travelling abroad.

   Note: *Digital TV is not affected by a change of country.*
6. **Channel list**: Select to view an alphabetical list of all TV channels currently available.
   - A small preview of the current channel and programme title is also displayed.
   - Touch a listed channel to change the preview and title to the new channel.
   - Touch the preview to view that channel.

   Note: *As the TV system is continually checking the availability of channels, it is possible for a channel to be in the list, but not actually available (e.g. when driving through different transmitter regions).*

Note: *After a country format change, the channel list will be empty until the system has scanned all channels at least once.*

7. TV channel presets:

- Touch and hold to store the current channel as a preset. The channel name will then be displayed on the soft key.
- Briefly touch to select the channel stored on that preset.

Note: *Stored presets contain information identifying the country where the preset was stored. When a preset is selected, the TV format of the country where the preset stored will be adopted. As analogue TV formats differ in different countries, this may create a situation where the analogue channel list is empty.*

For information on the use of the audio/video controls on the audio unit and steering wheel. See **141, AUDIO/VIDEO CONTROLS**.

VIDEO MEDIA PLAYER CONTROLS

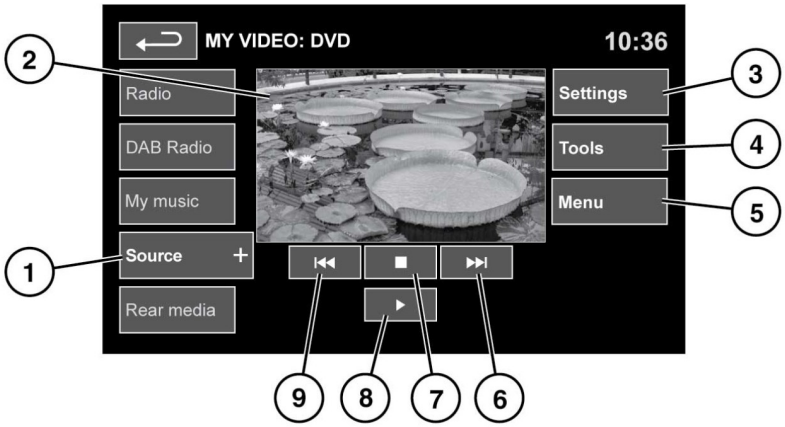

E151161

1. **Source**: TV band/video input selection. Touch to view and select DVD or other forms of video media (CD/USB), provided the relevant media is present. The selected option will be displayed.

   Note: *After 5 seconds without use, the TV/My video menu will close.*

2. Preview screen for video media information: Touch to select full screen mode.
   Short touch the screen again to view the controls at any time.
   To return to preview mode, touch and hold the full screen view.

3. **Settings**. Depending on the video media specification, there are 3 sub-menus within settings: **Options**, **VOD** (Video On Demand) and **Audio settings**.
   VOD allows playing of DivX VOD content from a video media. The eight digit registration code will be displayed when the VOD soft key is touched.
   The player must also be registered with DivX. See **143, LICENSING**.

4. **Tools**: The following options can be selected:
   - GOTO: The GOTO menu allows you to access specific parts of the video, by **Chapter** or **Title number**.
   - Subtitles.
   - Angle.
   - Audio.
   - Top menu.

5. **Menu**: Select to view the Video media menu. On some screens this may be replaced by a **Browse** soft key.

6. Seek up: Select to view the next DVD chapter or to scroll through video media files.

7. Select to pre-stop playback. A second touch will stop and reset the DVD.

8. Select to start/restart play.

9. Seek down: Select to view the previous DVD chapter or to scroll through video media files.

For information on the CD/DVD loading slot and eject button, and the use of the audio/video controls on the audio unit and steering wheel, see **141, AUDIO/VIDEO CONTROLS**.

VIDEO MEDIA INHIBIT WITH VEHICLE MOVING

When the vehicle is moving the video picture will automatically be inhibited. The Touch screen will display the **TV/My video** screen and the relevant safety message will be displayed. If Dual view is fitted, a prompt for the passenger to activate dual view is displayed. See **162, DUAL VIEW**.

FULL SCREEN VIEW

When full screen mode is selected, the seek controls operate in the same manner as they do in preview mode.

Use the relevant soft key to select the **4:3**, **16:9** or **Zoom** option to magnify the picture.

DUAL VIEW CONTROLS

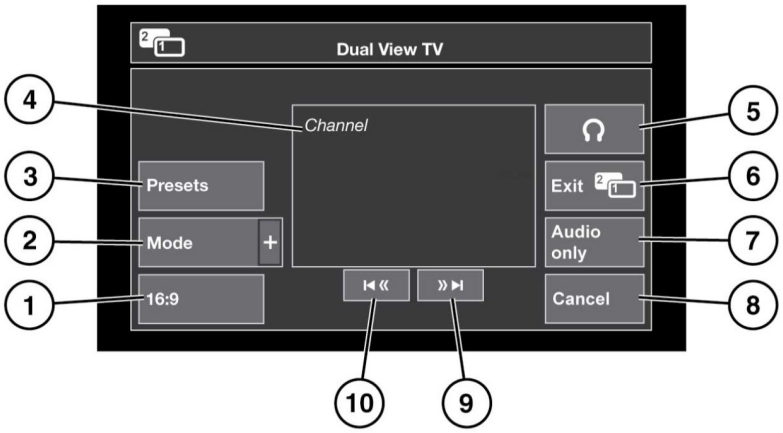

E141042

1. Select to change the picture format (4:3, Zoom, 16:9). The next available format is displayed on the soft key.
2. Select to view a list of all available video sources. Touch the relevant soft key to select an alternative source. The controls menu for that source will then be displayed.
3. Touch to select a list of pre-set channels.

   Note: *The preview screen will be deactivated if the vehicle is moving.*
4. Information on the current video source (e.g. TV channel and program name).
5. Select to switch wireless headphone output on or off.
6. Select to cancel dual view: The Touch screen reverts to the menu currently in use by the driver.
7. Select to retain audio for the video source while the display reverts to the menu currently in use by the driver.
8. Select to dismiss the dual view controls pop-up.
9. Seek up: Select to view the next channel on the channel list or the next track on CD or DVD.
10. Seek down: Select to view the previous channel on the channel list or the previous track on CD or DVD.

    Note: *If the chosen media is CD or DVD, then a play/pause soft key is displayed between the Seek soft keys.*

    Note: *If the controls menu is not used for over 5 seconds, the display will revert to full screen mode. Press the dual view button again to view the controls.*

DUAL VIEW

Dual view allows the front passenger to view TV or other video media on the Touch screen, while the driver uses an alternative system (e.g. radio or navigation).

Note: *If the driver has selected an alternative audio source (e.g. radio), this will be heard over the vehicle speakers. The passenger will need to listen to the dual view source using the wireless headphones.*

Press this button to activate dual view mode (located to the right side of the Touch screen).

Once dual view is active, the passenger should press this button to show/hide the dual view controls menu.

Note: *The controls menu will also be displayed on the driver's view.*

Note: *Rear seat passengers may be able to see both views when dual view is active.*

DUAL VIEW HEADPHONES

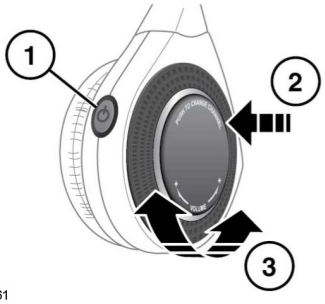

E150761

1. Press to turn on/off.
2. Press to change audio channel.
3. Rotate to adjust headphone volume.

REAR MEDIA CONTROL FROM THE TOUCH SCREEN

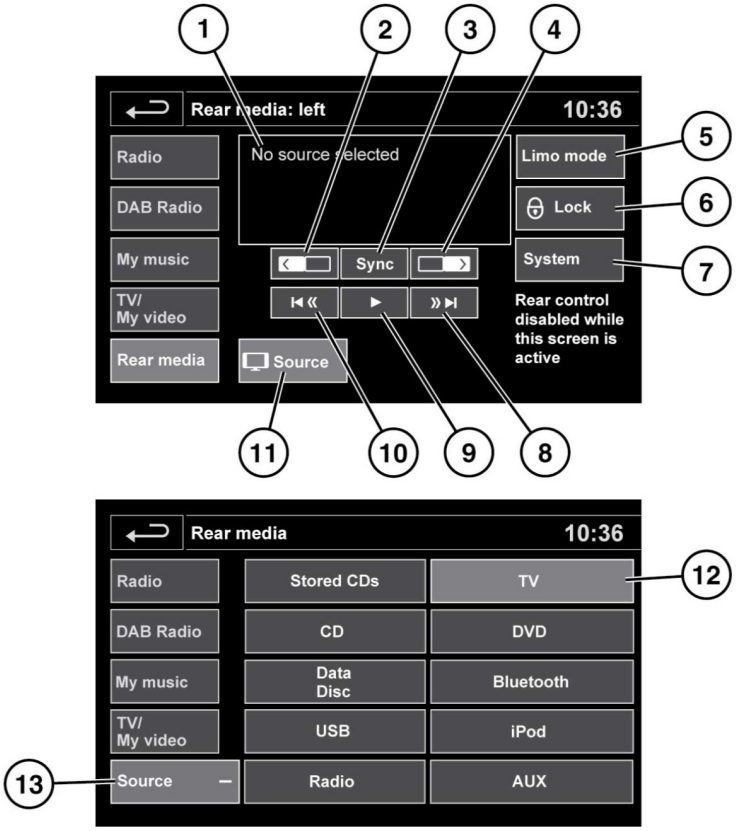

E152321

Touch **Rear media** on the Audio/video home menu to select the Rear media control screen.

1. Information display.
2. Touch to select the left-side rear screen.
3. Touch to synchronise both screens. Then select the source to be synchronised.

   Note: *Pressing the synchronise button will not synchronise a source already selected.*
4. Touch to select the right-side rear screen.
5. **Limo mode**: Touch to turn Limousine mode ON/OFF.
   When Limousine mode is turned ON, the rear passengers will have control of the total cabin audio system and any shared sources via the remote control.
6. **Lock**: Touch to lock or unlock the rear media remote.
7. **System**: Touch to turn the selected rear screen/s ON/OFF.

8. Forward/Skip for the selected screen.
9. Play/Pause for the selected screen.
10. Rewind/Skip for the selected screen.
11. **Source**: Touch to select the rear media source screen.
12. Media source selection: Touch the required media button.

    Note: *For DAB Radio select Radio.*
13. **Source -**: Touch to select the required media and return to the **Rear media** control screen. If required, the selected source can then be controlled via the front screen.

Note: *When the main rear media control screen is displayed on the Touch screen, the rear media remote control will be locked out.*

REAR MEDIA REMOTE CONTROL

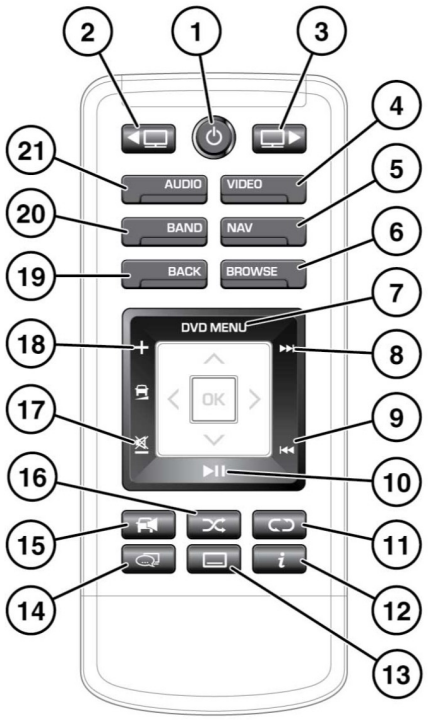

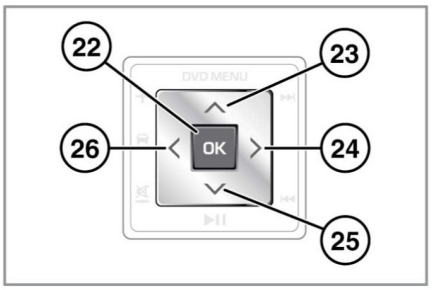

E151273

1. Press and release to turn off the screen. Press and hold to turn off the rear media system.
2. Left screen select.

3. Right screen select.
4. Video source select.
5. Navigation summary.
   Brazil only: 1/12 screen segment select.
6. Browse/TV channel list.
7. DVD menu.
8. Next track/file/channel/station.
9. Previous track/file/channel/station.
10. Play/Pause.
11. Repeat.
    Brazil only: Repeat and 'Red' selections.
12. Information.
    Brazil only: Information and 'Yellow' selections.
13. Subtitles on/off.
    Brazil only: Subtitles on/off and 'Green' selections.
14. Press to select any available TV streams.
15. Cabin audio volume on/off.
16. Shuffle.
    Brazil only: Shuffle and 'Blue' selections.
17. Cabin audio volume decrease/mute.
18. Cabin audio volume increase.
19. **Back**: Press to go back to previous menu.
20. Radio band select.
    Brazil only: Radio band select and interactive TV select.
21. Audio source select.
22. **OK**: Press to confirm selection.
23. Cursor control: Up*.
24. Cursor control: Right*.
25. Cursor control: Down*.
26. Cursor control: Left*.

*These are multi-function keys depending on the source selected.

USING RSE

To make sure the system responds to your selections, the upper end of the remote control should be pointed towards the appropriate rear screen.

To activate the system, press the rear media on/off button on the remote control, followed by the appropriate screen selection button.

Next, select the desired audio or video function button. Subsequent selections on the remote control will operate the last selected user system.

To avoid accidental operation of the wrong user system, it is advisable to always select the required user system before making any other selection.

Note: *To prevent accidental damage, always store the remote control in the stowage area provided when not in use.*

REAR MEDIA HEADPHONES

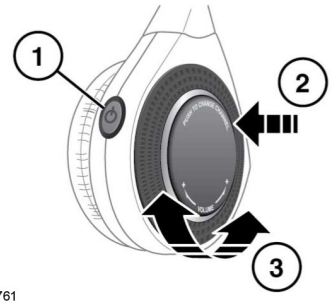

E150761

1. Press to turn on/off.
2. Press to change audio channel.
3. Rotate to adjust headphone volume.

REAR MEDIA REMOTE CONTROL BATTERY

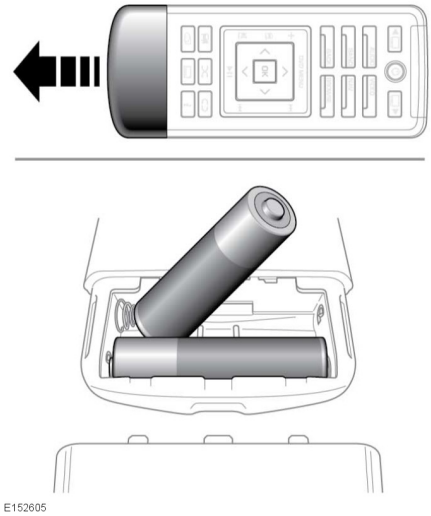

Low battery power is indicated by the remote control power button flashing 3 times when pressed. To renew the batteries:

- Remove the chrome battery cover.
- Install 2 AAA batteries. Make sure the polarity of the batteries matches that shown inside the remote control battery compartment.

  Note: *The remote control will not operate if the batteries are fitted incorrectly.*

  Note: *Always use good quality batteries of the same type.*
- Replace the chrome battery cover.

Battery disposal: Used batteries must be disposed of correctly, as they contain harmful substances. Seek advice on disposal from your Dealer/Authorised Repairer and/or your local authority.

USING VOICE CONTROL

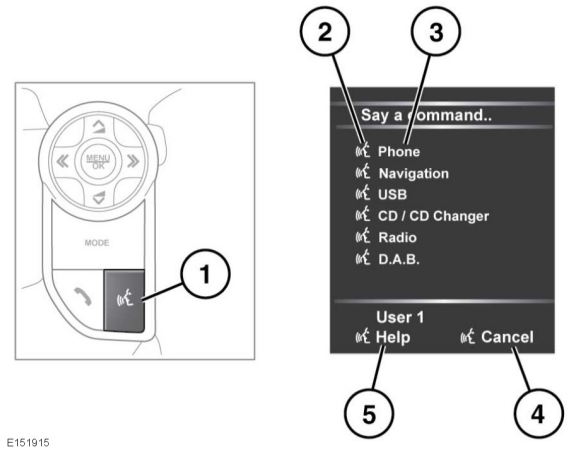

Note: *The voice system has been designed to recognise a number of languages. However, Land Rover cannot guarantee the system will be compatible with every accent group within those languages. Please speak to your Dealer/Authorised Repairer about testing the Voice System for compatibility with a particular accent group.*

1. Voice button: Press briefly to start a voice session. Press and hold to cancel a voice session.

   Note: *Briefly press the Voice button during a voice session, to interrupt audible feedback. Wait for the tone to sound before giving the next command.*

   A voice session will cancel if a high priority warning appears in the message centre or there is no user input for a sustained length of time. It is not possible to start a new voice session until the warning has been cleared.

2. Voice symbol: Indicates that a command is available. Wait for the symbol to appear and a tone to sound before using the command.
3. Command list: Appears in the instrument panel, providing feedback and available commands at each stage of the voice session. Say an available command.

   Note: *As the commands are listed before the system is ready to listen, it is important to wait for the voice symbol to appear alongside the relevant command, before using the command.*

4. When displayed, say **Cancel** to cancel the current voice session.
5. When displayed, say **Help** to get assistance during a voice session.

   Note: *The currently selected user (User 1 or User 2) is identified at the bottom of the command list.*

Note: *If a listed item is longer than the available space on the menu, **...>** will appear. Use the seek controls on the steering wheel to view the entire entry. See* ***141, AUDIO/VIDEO CONTROLS****.*

VOICE TUTORIAL

To listen to a tutorial detailing the operation of the Voice system:

1. Briefly press the Voice button to start a voice session.
2. Wait for the tone to sound, then say **Voice tutorial**.

Alternatively, the tutorial can be selected using the Touch screen, as follows.

1. Select **Setup** from the Touch screen Home menu, or by pressing the Setup button.
2. Select **Voice** from the Setup menu.
3. Select **Operating guide** from the Voice settings menu.
4. Select **Voice tutorial**.

The voice tutorial can be cancelled at any time by selecting **Cancel** on the on-screen pop-up or by pressing and holding the Voice button.

VOICE TRAINING

This is a feature designed to enable the system to better recognise the vocal characteristics of a user, once the training has been completed. To carry out Voice training:

1. Select **Setup** from the Home menu, or by pressing the Setup button.
2. Select **Voice** and from the Setup menu.
3. Select **Voice training** from the Voice settings menu.
4. Select **User 1** or **User 2**, to start the training.
5. Follow the on-screen and audible instructions.

The training session can be cancelled at any time by selecting **Cancel** from the on-screen pop-up or by pressing and holding the Voice button.

VOICETAGS

Voicetags enable the user to personalise the Voice system so that a single name can be used to call-up a navigation destination, telephone number or radio channel.

To add a Voicetag:

1. Briefly press the Voice button to start a Voice session.
2. Wait for the tone to sound then say **Phone**, **Navigation** or **Radio**.
3. Say **Store voicetag**.

Alternatively, Voicetags can be managed via the Touch screen as follows:

1. Select **Setup** from the Home menu, or by pressing the Setup button.
2. Select **Voice** from the Setup menu.
3. Select **Voicetags** from the Voice settings menu.
4. Select the system which the Voicetag is to activate (**Phone**, **Navigation** or **Radio/DAB**).

Follow the on-screen and audible instructions.

NAVIGATION POI VOICE COMMANDS

To request the display of Points Of Interest (POI) identifiers on the navigation display, say **Navigation** with 1 of the following POI categories:

- Petrol station/Petrol.
- Parking/Car park.
- Land Rover.
- Hospital.
- Golf course.
- Tourist information.

Voice control

- Restaurant/I'm hungry.
- Shopping centre.
- Hotel.
- Motorway service.
- Town centre.

Note: *The word* ***Navigation*** *must be followed immediately by a category.*

Icons will appear on the navigation display, indicating the locations of the selected POI. For further information about POIs, see **185, CATEGORIES AND SUB-CATEGORIES**.

TELEPHONE SYSTEM OVERVIEW

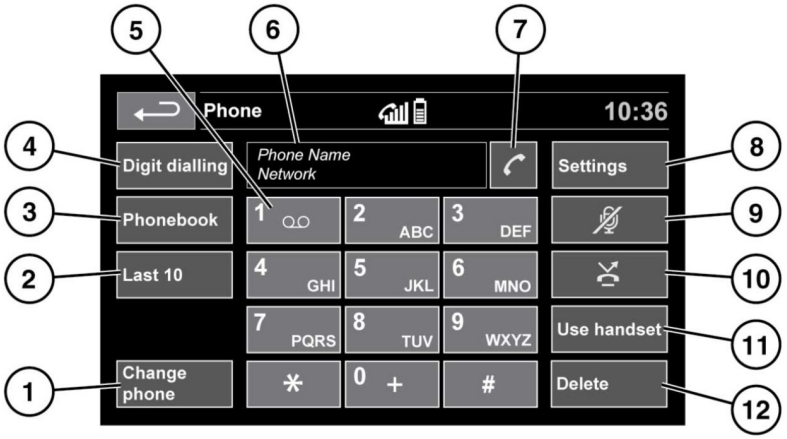

1. **Change phone.** Search new or change to another paired phone.
2. **Last 10.** Access the last 10 dialled, received and missed calls.
3. **Phonebook.** Access the downloaded phonebook.
4. **Digit Dialling.** Access Digit Dialling mode.
5. Touch and hold to retrieve your Voice mail.
6. Status display: Displays the name and/or number dialled and call duration.
7. Call Connect/Disconnect icons. Touch to send/accept or end/reject a call.
8. **Settings.** Access Voice mail set up, Answer options and Phone options.
9. **Mute microphone.** Initiate Privacy mode. While selected, the caller will not hear you talking.
10. Auto reject. When active, any incoming calls will be rejected or diverted to voice mail (depending on mobile phone settings).
11. **Use handset.** Switch the call to your mobile phone.
12. **Delete.** Touch to delete the last entered digit, and hold to delete the whole entered number.

BLUETOOTH® INFORMATION

Bluetooth® is the name for short-range radio frequency (RF) technology that allows electronic devices to communicate wirelessly with each other.

The Land Rover **Bluetooth**wireless technology system supports **Bluetooth**® Hands-Free Profile (HFP), Advanced Audio Distribution Profile (A2DP) and Audio Video Remote Control Profile (AVRCP).

Note: *HFP and A2DP/AVRCP profiles can be connected independently, so a phone can be connected via 1, while a media device can be connected via the other, at the same time.*

Telephone

Before making use of the vehicle's **Bluetooth** wireless technology phone system, your **Bluetooth** wireless technology device must be paired and connected to the vehicle system. This is done using 1 of 2 methods; via your phone to the vehicle or from the Touch screen to your phone. If 1 of these methods is not successful, try the other option.

Each time the ignition is switched on the system will attempt to connect with the last connected phone.

As mobile phones have a wide range of audio and echo characteristics, it may take a few seconds for the vehicle system to adapt and deliver optimum audio performance. To achieve this, it may be necessary to reduce the in-vehicle volume and ventilation fan speed slightly.

TELEPHONE SAFETY

Switch off your telephone in areas with a high explosion risk. This includes filling stations, fuel storage areas or chemical factories, as well as places where the air contains fuel vapour, chemicals or metal dust.

Always stow your mobile phone securely.

The functioning of cardiac pacemakers or hearing aids may be impaired when the phone is in use. Check with a doctor or manufacturer whether any such devices you or your passengers are using, are sufficiently protected against high-frequency energy.

The Health Industry Manufacturers' Association recommends that a minimum separation of 15 centimetres (six inches) is maintained between a wireless phone antenna and a pacemaker, to avoid potential interference with the pacemaker. These recommendations are consistent with the independent research by, and recommendations of, Wireless Technology Research.

TELEPHONE COMPATIBILITY

Please refer to the Owners section of the Land Rover website at **www.landrover.com**, for a list of compatible phones.

Note: *The Bluetooth® wireless technology devices listed, have been tested for compatibility with Land Rover vehicles. Performance will vary, based on the phone's software version, battery condition, coverage and your network provider. Phones are warranted by their manufacturer, not Land Rover.*

PAIRING AND CONNECTING USING THE PHONE

Note: *The process of pairing and connecting your phone with the vehicle using the phone will vary depending on the type of phone used.*

1. Switch the ignition on and make sure the Touch screen is active.
2. From the home menu, select **Phone**.
3. A menu will appear. Select **Search new**.
4. Select **Device to vehicle** option.

   Note: *The vehicle's Bluetooth® wireless technology system is discoverable for only 3 minutes.*
5. Using the phone, search for Bluetooth® wireless technology devices.
   On some phones, this is referred to as new paired device. See your phone's operating instructions for further information.

6. When the vehicle's Bluetooth® wireless technology system is discovered, follow the on-screen instructions. Select **Yes** when prompted, to confirm the pairing.
   Either the phone or the vehicle system will ask for a PIN (Personal Identification Number). When prompted, enter a PIN of your choice and select **OK** to confirm.
7. Enter the same PIN into the other device.
8. Once your phone is paired and connected to the system, a confirmation message will be displayed before switching to the Digit Dial screen.

   Note: *Due to the duration of a Bluetooth® wireless technology device search, it is advised that the timeout to home screen feature is switched off before attempting to search for devices. This setting can be changed within Vehicle, Syst settings, Display set, Timeout to home screen.*

PHONE PAIRING AND CONNECTING USING THE TOUCH SCREEN

1. Switch on your mobile phone's **Bluetooth®** wireless technology device connection. Make sure that your mobile phone is in **Bluetooth®** wireless technology device discoverable mode, sometimes referred to as find me mode (see your phone's operating instructions for more information).
2. Switch the ignition on and make sure the Touch screen is active.
3. From the home menu select **Phone**.
4. A menu will appear. Select **Search new**.
5. Select **Vehicle to device** option.
6. Identify your phone from the displayed list and select the corresponding **Pair and connect** option.

   Note: *If more than 5 phones are detected, it may be necessary to use the scroll bar to see the entire list.*
7. When prompted, enter the PIN code into your phone. See your phone's operating instructions for more information.
8. Once your phone is paired and connected to the system, a confirmation message will be displayed before switching to the Digit Dial screen.

Note: *Due to the duration of a **Bluetooth®** wireless technology device search, it is advised that the timeout to home screen feature is switched off before attempting to search for devices. This setting can be changed within **Vehicle**, **Syst settings**, **Display set**, **Timeout to home screen**.*

CHANGING THE CONNECTED PHONE

Up to 10 mobile phones can be paired with the vehicle in the same way. However, only one can be connected and ready for use as a phone at any one time.

To connect a different paired phone to the vehicle, follow the steps below:

1. From the home menu, select **Phone**.
2. A menu will appear. Select **Change phone**.
3. Identify and select your phone from the displayed list.
4. Once your phone is connected to the system, a confirmation message will be displayed before switching to the Digit Dial screen.

TELEPHONE SYSTEM ICONS

Connect. Use to send or accept a call and access last 10 calls list.

Disconnect. Use to end or reject a call.

No phone connected.

Phone signal strength indicator.

Phone battery level indicator.

Bluetooth. Indicates that a Bluetooth® wireless technology device is connected.

Tick. Indicates that a Bluetooth® wireless technology device is paired.

Voicemail. Press and hold to dial the stored voicemail number.

Scroll bar up arrow. Use to scroll up lists of detected phones, calls or phonebook entries.

Scroll bar down arrow. Use to scroll down lists of detected phones, calls or phonebook entries.

STEERING WHEEL CONTROLS

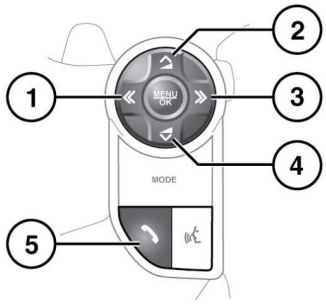

E150938

1. Press to scroll back through received calls, last 10 list and finally to exit list.
2. Increase volume when in a call, scroll up a displayed list or number listed for stored contact.
3. Press to scroll to last 10 list and received calls.
4. Decrease volume when in a call or scroll down a displayed list or number listed for stored contact.
5. Press to answer an incoming call. Press to end a call. Press and release to dial a number/contact. Press and release to access last 10 dialled list. Press and hold to access phonebook list view.

Note: *When scrolling through a phonebook or last 10 list, each contact is also displayed in the message centre.*

CALL VOLUME

The phone call volume is operated by the audio system's volume control.

If the audio system is in use when a phone call is active, the audio system source is suppressed for the duration of the call.

PHONEBOOK

Contacts stored in the memory of a paired phone can be automatically downloaded to the vehicle's phonebook each time the phone is connected to the system. See **172, TELEPHONE COMPATIBILITY**.

Certain phones store the phonebook in two different areas, the SIM card and the phone memory. The vehicle system will access only those numbers stored in the phone memory.

To access contacts from the phonebook:

1. From the Phone menu, select **Phonebook**.
2. Using the keyboard, select the letter you wish to search under.
3. Select **List** to view the phonebook.
4. Identify the required contact from the displayed list and touch to call. If a contact has more than one number stored, select the required number from the list.

   Note: *It may be necessary to use the scroll bar to see the entire list.*
   There are also options to view more contact information, by selecting the corresponding **i** key.

If your phone supports contact type data, you will be able to see a contact type icon in the vehicle's phonebook directory. These can be seen on the right-hand side of each contact in the directory and will indicate one of the following types:


Default.


Mobile.


Home.


Work.

THE NAVIGATION SYSTEM

Navigation instruction is by map and turn information displayed on the Touch screen and can be complemented by voice guidance, if required. The system uses signals from Global Positioning System (GPS) satellites combined with information from vehicle sensors and from data stored on the hard drive, to establish the true position of the vehicle.

Note: *Mapping data loaded on the hard drive is relevant to the market in which the vehicle is first sold and will provide guidance and information only for that area. Your Land Rover Dealer/Authorised Repairer will have details of software updates.*

Using this combination of data sources, the vehicle's navigation computer enables you to plan and follow a route map to your desired destination.

The Touch screen is used to control navigation via menus, text screens and map displays.

Operate the system only when it is safe to do so.

Note: *The Navigation system fitted to your vehicle does not support speed camera alerts.*

The requirements of national Road Traffic Regulations always apply.

Observation of traffic signs and local traffic regulations always take priority.

The Navigation system serves solely as an aid to navigation. In particular, the Navigation system cannot be used as an aid to orientation when visibility is poor.

GPS signals may occasionally be interrupted due to physical barriers, such as tunnels and roads, under raised highways.

However, direction and speed sensors on the vehicle will minimise any adverse effect on the Navigation system. Normal operation will resume once the obstruction has been passed.

Under certain conditions, it is possible for the vehicle's position shown on screen to be incorrect. This may happen when:

- Driving on a spiral ramp in a building.
- Driving on or beneath elevated roads.
- Two roads are close and parallel.
- The vehicle is transported to another destination.
- After the vehicle is rotated on a turntable.
- After vehicle battery disconnection.

USING THE NAVIGATION SYSTEM

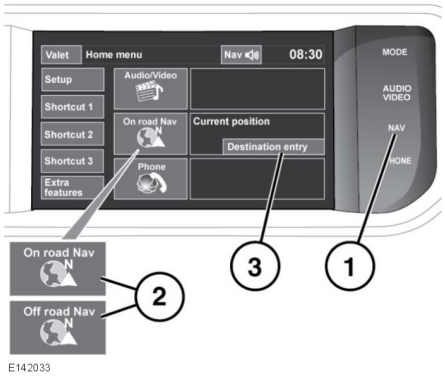

1. **NAV** shortcut button: Press for navigation.
2. **Navigation** soft key: Touch for navigation.
3. **Destination entry**: Touch to display the destination entry menu.

Note: *On vehicles with off-road navigation, the soft key includes* ***On road NAV*** *or* ***Off road NAV****, to show the current Navigation mode.*

After touching **Continue**, the Touch screen will display the previously displayed map view. This will show the current vehicle position. Touch the **Nav menu** soft key to display the Main menu screen.

At this point, the first time user should set up personal preferences in the **Nav set-up** area. These settings are applied whenever navigation is used.

MAIN MENU

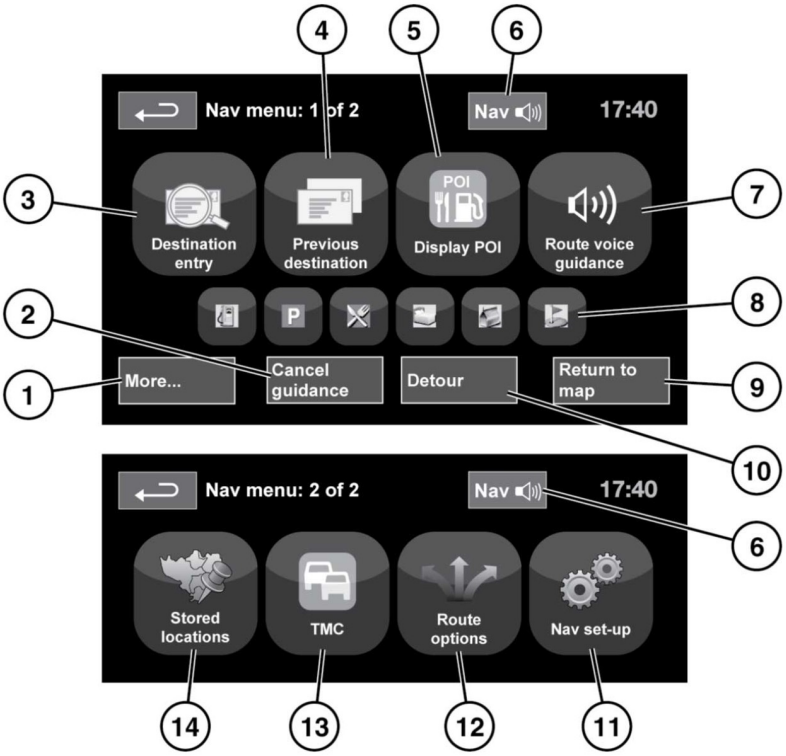

1. **More…**: Displays page 2 of 2 Nav menu screen.
2. **Cancel guidance**: Cancels the current route guidance.
3. **Destination entry**: Provides a choice of options for entering a destination.
4. **Previous destination**: Displays previous destinations entered.
5. **Display/Hide POI**: Turns the POI (Point Of Interest) icons on the map on/off.
6. When a destination is set, the Range Rover logo is replaced by a soft key which enables the last voice instruction to be repeated.
7. **Route voice guidance**: Allows the Voice guidance messages to be turned off for the current journey. The soft key is highlighted while Voice guidance is enabled.
8. Quick POI shortcuts. This provides the option to quickly enter a destination of a local POI. The categories can be changed in the Navigation setup menu.
9. **Return to map**: Advances to the main map screen.
10. **Detour**: Allows a detour from the current route.

11. **Nav set-up**: Settings for the Navigation system.
12. **Route options**: Allows selection of various options for the route.
13. **TMC** (Traffic Message Channel): Not used for entering a destination but, when enabled, will provide data about road conditions and any events that may affect the journey.
14. **Stored locations**: Manages the stored locations.

MAP SPLIT SCREEN

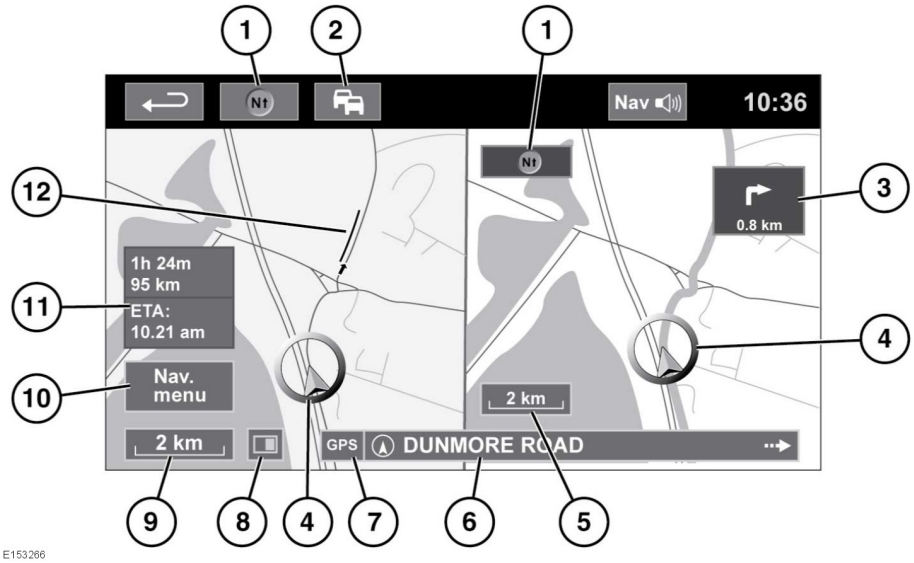

1. Compass (always indicates north): Press to select: north up, heading up or bird's eye map style.
2. TMC (Traffic Message Channel) signal: Without a diagonal bar, a signal is being received; with a diagonal bar, a signal is not being received. The icon will also change colour depending on the status of traffic on the route.
3. Next direction display: When Junction map view has been switched off, touch the icon to view again.
4. Current vehicle position and direction.
5. Right map view, scale/zoom setting.
6. Current location.
7. GPS signal indicator: The indicator is only displayed when there is no reception.
8. Screen mode.
9. Left map view, scale/zoom setting.
10. Opens the Navigation menu; 1 of 2 screens.
11. Distance/time/ETA (Estimated Time of Arrival) to the destination.
12. TMC event (traffic congestion).

Touch to close the Junction and Motorway junction view. The previously displayed map is shown after closing.

MAP AUTO ZOOM

When under guidance, the map zooms in automatically when approaching a junction or motorway junction.

1. From the map screen, touch the left map view, scale/zoom soft key.

2. Touch the **Auto zoom** soft key. The soft key will be highlighted when auto zoom is enabled.

Note: *The highest level to which the map will zoom out, is the scale value set before the* ***Auto Zoom*** *feature is switched on.*

SCREEN MODES

Touch the screen mode selection key to view a series of icons, each depicting a different screen mode (as detailed below). Touch the relevant icon to select the desired screen mode.

Full screen view.

Split screen view.

Shows a list of turn directions on the right half of the screen.

Guidance screen: Shows a detailed view of the next junction on the motorway or junction view on non-motorway roads, in the right half of the screen.

Motorway information: This view is only available when travelling on a motorway. It displays automatically to show remaining motorway exits along your route or all exits on current motorway when route is not set.

To turn off the Guidance or Motorway information screens, proceed as follows:

1. From the **Nav menu**, touch **More…**.
2. Select **Nav set-up**.
3. Touch **User settings**.
4. Touch **Guidance screen** or **Motorway information** to deselect the option.
5. Touch **Ok** to confirm.

SEARCH AREA

The navigation map database is divided into countries, or areas of countries, called search areas. When setting a route, the destination (or waypoint) entered must be in the currently selected search area.

Before attempting to set a destination or waypoint, set the correct search area as follows:

1. Select **Destination entry** from the main navigation menu.
2. Touch **More…**.
3. Touch **Search area**.
4. Scroll through the list and select the 3 letter code that corresponds to the desired destination area.
5. Select **Ok**. The destination entry menu is shown and the information window shows the currently selected search area.

SETTING A DESTINATION

1. After touching **Continue**, the initial map screen is displayed, now touch **Nav menu**.
2. From the Navigation menu, touch **Destination entry**.

   Note: *Destination entry button is also available in Home menu as well as in the main map view.*
3. Touch **Address** from the **Destination** screen and input the town name or postcode (short postcode in the UK).
4. Once sufficient letters have been entered, touch **OK** or **List** to display all the possible towns.
5. If necessary, use the scroll arrows to the left of the list to search up or down. Select the town that you require.

6. Now enter the road name. Once sufficient letters have been entered, touch **OK** or **List** to display all the possible roads.
7. Select the road you require. Enter the house number of the address (if known) and then touch **OK** to confirm.
8. If the house number is not known, select **OK**; the end of the road is then used as the destination.
9. The map screen showing the selected destination details is displayed. Touch **GO** to calculate the default quick route, or **Review route** for alternative routes.
10. Touch **GO** to start the journey.

START GUIDANCE

After selecting **Review route**, the system will calculate the route.

1. Touch **3 Routes** to display a choice of 3 different route options on the map. The roads on the map are drawn in 3 different colours to highlight each route. EcoRoute helps you find the most fuel-efficient route available. A display of 3 leaves indicates the most fuel-efficient route.
2. Select route **Quick, Short** or **Alt route** by touching the respective box displayed on the right side of the map.
3. Touch **Change Route** followed by **Route preferences** to change the route settings.
4. When you have made your selection, if any, touch **GO**.

Note: *As you approach a junction, in addition to the voice guidance, an inset on the map will display an enlarged view of the junction.*

AVOID POINTS

When calculating a route, an area to avoid can be set and stored.

1. From the **Nav menu**, touch **More…**.
2. Select **Stored locations**.
3. Select **Avoid points**.
4. Select **Add**.
5. Select the location of the area to avoid from the **Destination entry** menu. Touch **Ok** to activate the view where the size of the area to avoid can be set. The size of the area can be adjusted by using the '**+**' and '**-**' symbols.
6. Touch **Ok** to activate the area to avoid.
7. Touch **Ok**, the area to avoid is now set and stored.

To edit or delete an area to avoid from the stored list:

1. From the **Nav menu**, touch **More…**.
2. Select **Stored locations**.
3. Select **Avoid points**.
4. From the sub-menu, select **Edit** or **Delete**.

EASY ROUTE

In **Route options**, **Easy Route** can be turned **On** or **Off**.

When **On** is selected, **Easy Route** changes the calculation parameters of **Alt.** (Alternative route), in order to reduce:

- Junctions.
- Turns.
- Turns that cross traffic.
- The priority of minor roads.
- Complex junctions and manoeuvres.

LEARN ROUTE

In **Route options**, **Learn Route** can be turned **On** or **Off**.

When **On** is selected, if you make the same deviation from the proposed route 3 times, then the system will memorise the deviation and offer that as the normal route from then on. Select **Reset all routes** to delete any learnt routes and return to the default settings.

VOICE GUIDANCE

To turn Voice guidance on or off, but maintain Route guidance, proceed as follows:

1. Touch **Nav menu** on the navigation screen.
2. Touch the **Route voice guidance** soft key. The soft key will be highlighted when Voice guidance is enabled.

CANCEL ROUTE GUIDANCE

To clear the route, proceed as follows:

1. Touch **Nav menu** on the navigation screen.
2. Touch the **Cancel guidance** soft key.

QUICK POI SELECTION

1. Touch the map to display the additional options.
2. Touch the **Point Of Interest** (POI) soft key.
3. The screen shows 6 suggested categories, 5 of which can be selected as quick **Point Of Interest** (POI).
4. Select a Quick POI category, or touch **More** to see further POIs. Touch **Ok** to confirm a selection.
5. The map with the POI icon(s) is displayed. Scroll the map to the POI icon and then touch **Set destination** to set and calculate the route.
6. Touch **GO** to start the journey.

Note: *Selected POIs can be hidden if required by selecting* ***Nav menu*** *followed by* ***Hide POI****.*

Note: *POI icons can only be displayed up to the 1 km (½ mile) zoom level.*

RESTORE SYSTEM DEFAULTS

From the Navigation menu, press **More…** and then select **Nav setup**. If you have made any changes to the system's default settings, use this menu to restore the original settings.

FAVOURITES

This enables you to manage destinations such as, place of work, home, favourite restaurant.

From the favourites sub-menu in stored locations, you can save up to 400 stored favourites.

1. From the **Nav menu**, touch **More…**.
2. Select **Stored locations**.
3. Touch **Favourite**.
4. To store a favourite, select **Add** from the sub-menu.
5. Select any destination entry method and confirm the desired location.

FAVOURITES DETAILS

1. From the **Stored locations** menu, select **Favourite**.
2. Select **Edit** or **Delete**.
3. Touch the selected favourite to display the details.
4. Select the chosen detail to edit. Details include **Attribute**, **Name**, **Phone number**, **Location** and **Icon**.

HOME

1. From the **Nav menu**, touch **More…**.
2. Select **Stored locations**.
3. Touch **Home location**.
4. To store a home location, select **Add** from the sub-menu.
5. Select any destination entry method to set your home location. Touch **Ok** to confirm.

6. Touch **Ok** from the favourite summary; home location is now set.

POSTCODE

Not all countries have this facility.

1. From the **Nav menu** select **Destination entry**.
2. Touch **Postcode**. Enter the postcode of your waypoint or destination from the keypad. The postcode must be entered precisely, including any spaces or punctuation.
3. When the postcode has been entered touch **Ok**.

   Note: *This includes full Postcode for the UK.*

EMERGENCY

Not all countries have this facility.

1. From the Nav menu, touch **Destination entry**.
2. Touch **Emergency**, to display a list of local police stations, hospitals or Land Rover Dealerships.
3. Touch **Name** to display the list in alphabetical order or **Distance** to display the list in order of proximity to the current vehicle location.
4. Touch the name of the facility to set it as a destination or waypoint.

MAP

Scroll the map to the area of your destination or waypoint, zooming in if required.

This location can be stored as a favourite, destination or waypoint.

COORDINATES

If you know the coordinates of your destination they can be entered from this screen.

1. From the **Nav menu**, select **Destination entry**.
2. Touch **More…**.
3. Then select **Coordinates**. The full latitude must be entered first before the longitude coordinates can be entered.
4. Touch **OK**, when the coordinates have been entered.

If the coordinates entered are not contained within the area covered by the available maps, a message will be shown. This can also occur if the incorrect coordinates have been entered.

RECALLING A PREVIOUS DESTINATION

1. From the **Nav menu**, touch **Previous destination**.
2. Touch your previous destination from the list. The map showing the selected destination is displayed.
3. Touch **GO** to start the journey.

MOTORWAY ENTRY/EXIT

1. From the **Nav menu**, touch **Destination entry**.
2. Touch **More…**.
3. Touch **Motorway Entry/Exit**.
4. Enter the motorway name or number, or select from **List**.
5. Touch **Entrance** or **Exit**.
6. Enter the entrance or exit name for the chosen motorway, or select from **List**. The map showing the selected motorway and junction is displayed.
7. Touch **GO** to start the journey.

POINTS OF INTEREST (POI)

1. From the **Nav menu**, touch **Destination entry**.
2. Touch **More…**.
3. Touch **Point of interest**.
4. Touch **POI name** and touch **Ok** to confirm.
5. Enter POI name, or select from **List**.
6. Alternatively, choose **Category** to see all categories of POI and make your selection. See **185, CATEGORIES AND SUB-CATEGORIES**.
7. To narrow the search area, touch **Town** to enter a town name.
8. Once the POI has been selected, the map showing the selected destination is displayed.
9. Touch **GO** to start the journey.

Note: *If entering a POI name results in too many matches being listed, try entering the town name first. If you do not know the name of the POI you want, try selecting a POI category.*

Note: *POI icons can only be displayed up to the 1 km (½ mile) zoom level.*

DEALER LOCATIONS

Details of Land Rover Dealers are held on the Navigation system as a Point Of Interest (POI) category, under car/automotive category. See **185, LOCAL POI SEARCH**.

CATEGORIES AND SUB-CATEGORIES

The POI database is divided into a number of categories. Each main category is further divided into a number of sub-categories.

Touch the desired category and then choose desired sub-categories.

MY POI

Additional POIs can be downloaded and added to the list. The system can store up to 50,000 'My POIs', in up to 100 groups (whichever comes first).

Free POIs can be found on the internet and downloaded into the system. The name of the imported file will be displayed as a group name. Imported icons will be displayed on the map. In order for a file or icon to be successfully downloaded, the following conditions must exist:

- The POI file must be in a .gpx format, version 1.1.
- The POI file name must not contain the following characters; **-**, **/**, **;**, *****, **"**, **<**, **>**, or **|**.
- The POI file name must not exceed 35 characters.
- The icon file name must match the POI file name.
- The icon size must not exceed 32x32 dots.
- The icon format must be a bitmap (.bmp) or jpeg (.jpg).

To download files or icons, connect a USB device containing the POIs. See **154, CONNECTING A DEVICE**.

1. From the **Nav menu**, touch **More…**.
2. Select **Stored locations**.
3. Touch **My POI**.
4. Select **Add** to individually select each POI group to be downloaded. Select **Edit** to change **Name**, **Icon** or **Sound icon** or select **Delete**.

LOCAL POI SEARCH

Use to select Points Of Interest (POIs) close to the vehicle position.

1. From the **Nav menu**, touch **Destination entry**.

2. Touch **More…**.
3. Touch **Point of interest**.
4. Touch **POI near current** and touch **Ok** to confirm.
5. Select a POI category, if required select again from a sub-category and touch **Ok** to confirm.
6. Touch **Show List** or **Select Category** to make further selections.

   Note: *Up to 5 categories can be chosen to select a POI from.*
7. Select your POI destination from the list. The map showing the selected destination is displayed.
8. Touch **Destination** to set and calculate the route.
9. Touch **GO** to start the journey.

Note: *Nav POI near current position can be set as a Home menu shortcut. See* ***73, TOUCH SCREEN SETUP****.*

ARABIC NAVIGATION

To turn Arabic navigation on or off.

1. From the **Home menu**, touch **Set-up**.
2. Touch **System**.
3. Touch **Language** and select Arabic navigation **On**.
4. Select **Yes** to continue with Arabic navigation.

Note: *Voice recognition system is not compatible with Arabic navigation.*

RDS-TMC OVERVIEW

RDS-TMC (Radio Data System-Traffic Message Channel) is a feature that announces traffic hold-ups on your route, as broadcast by radio stations that transmit TMC information.

Touch the **TMC** button on the Navigation menu to access the TMC menu.

TMC events ahead, on route, can be displayed by touching the **Events ahead** soft key. TMC can be set to display on the map for all events, for major events or can be switched off. During route calculation, avoiding events is set to ON by default.

RDS-TMC DISPLAY

When a TMC signal is received, the icon in the top left of the screen will appear green. If a TMC signal is not being received, the icon will be shown with a bar through it.

The system will inform the driver of any roadworks, narrow road, contraflow, accidents, slippery road, diversion, information, parking information, congestion or other hazard.

The driver is informed of a traffic event as follows:

- An arrow is shown on the map at the location of the event.
- Text can be displayed showing the details of each occurrence. This can be selected by scrolling the map to an event and pressing **i** icon.
- Dynamic route guidance, displayed on top of the screen, informs about the successful calculation of an alternative route avoiding the event on the current route. Press **Info** for further options.
- Traffic event list shows all events sorted by road name/distance along your actual route. The information regarding the hold-up is maintained and updated even if the vehicle crosses into another country.

The information regarding the hold-up is maintained and updated even if the vehicle crosses into another country.

RDS-TMC ICONS

Any traffic event (broadcast on TMC) in your area, will be displayed as an arrow on the map.

In case of lost reception, this data is stored in the system for up to 15 minutes.

The colour of the TMC icon changes in order to show the type and priority of a TMC event. The background colour of the icon returns to normal when there is no longer an event or hold-up, or if any re-route instructions are calculated.

The TMC Event icons appear on the navigation map display to indicate the location and nature of a TMC event.

TMC Event icons will appear on the map, even if the event does not occur on your route.


Incident (Red star)


Moving tailback ahead (Red arrow)


Moving traffic queue, both lanes (Red double arrow)


Slow Traffic Ahead (Yellow arrow)


Slow Traffic Both Carriageways (Yellow double arrow)


Information (Yellow circle)


Incident (Yellow star)

Note: *Single arrow icons indicate that the traffic event affects traffic travelling in the direction of the arrow. Double arrows indicate that both directions are affected.*

If the map is scrolled to any of the above events, further details are available and are indicated as one of the following icons.


Closed Road


Special Warning (orange triangle)


Danger (red triangle)


Stationary Traffic


Congestion


Delay


Diversion


Contraflow


Event


Height Width Limit

USING TMC

Dynamic route guidance will attempt to calculate an alternative route to avoid a traffic event when the system receives an event warning. The system calculates a new route for all sections. However, if any waypoints are set, the system calculates for the next waypoint. If the event on route is serious (closed road) or if the new route is shorter than the current one and the current one was not recalculated within the last 5 minutes, then a message to confirm the new route will be displayed. This pop-up message will be displayed for 5 minutes and if the new route is not rejected, then the vehicle will stay on the current route.

OFF-ROAD NAVIGATION

The system can be switched between On-road and Off-road navigation by pressing the fascia **NAV** button twice, from anywhere in the system, then selecting **On road** or **Off road** as required. The Navigation soft key on the Touch screen Home menu displays **On road NAV** or **Off road NAV**, whichever is the current Navigation mode.

Off-road navigation maps are similar to the on-road maps, but have additional features and information such as a large compass display, heading, altitude, latitude and longitude etc.

When switching to off-road navigation mode during on-road guidance, the current highlighted route will be removed from the map and on-road guidance will be suspended.

Waypoints and destination icons will remain displayed. The destination is marked with a double circle.

When exiting off-road guidance, the system recalculates the route and reverts to on-road guidance.

Note: *TMC is not available in off-road navigation mode.*

NEW ROUTE

Allows the following route entry methods:

- Map.
- Previous.
- Distance and Bearing.
- Coordinates.

LOAD ROUTE

Load route allows a previously stored off-road route to be recalled. Touching the **Load Route** soft key will bring up a list of stored routes; touch the desired route to select. When loading a route, the current vehicle location is stored as the starting point, shown as the letter **S** on the map screen.

ROUTE OPTIONS

Allows access to the following commands:

Edit Route

These menu items are identical in operation to the on-road menus.

A maximum of 20 off-road routes can be stored. When the maximum is reached, the **New Route** soft key will no longer be active.

Stop Guidance

Allows a selected route to be cancelled. Touch the soft key to cancel guidance. All waypoints and icons will be removed.

Display route

The whole route can be displayed during guidance mode. It shows the total mileage of the route and updates as the vehicle's position changes.

CCP to Start (Current Car Position to Start)

A backward or return route can be made at any time. All waypoint icons of the original route are reset and the system draws straight lines between them.

The original start point is now designated as the destination point and waypoints are numbered in countdown order.

CCP to Destination (Current Car Position to Destination)

Restores the original route to destination after **CCP to Start** is selected.

Waypoint list

Off-road navigation waypoints are shown in numerical order. The nearest waypoint is the last in the list. A maximum of 35 waypoints can be stored.

During a forward route, the waypoint with the smaller number is nearest on the guidance display. During a backward or return route the smaller number is furthest away.

The bearing (e.g., R170) and distance (e.g., 1 mile) is a reference to the next waypoint. The bearing is the angle between the current heading and the next waypoint. The displayed information is continuously updated.

While the list is shown, if the destination is reached, the system changes to the map screen.

Skip Waypoint

While on a route, this soft key can be selected to skip the next waypoint. Guidance will then be given to the following waypoint.

Trace Points

If **Current Trace Point** is selected via **Route Options**, trace point icons are automatically placed along a route as it is traversed. They are useful to backtrack along the route, if required.

Adjustments to trace point operation can be made via the same screen. After selecting the **Edit Trace Point** option, changes can be made to any registered trace point route.

Select one of the options and make changes as required (e.g., trace points can be edited, renamed or deleted).

COMPASS VIEW

Compass view is recommended while driving off-road. Select the map screen and then the compass view icon at the top of the screen.

The compass can be viewed as ‘north is up’ or ‘vehicle is up’.

E142725

North is up

- The compass North pointer will always be at the top.
- The vehicle's position arrow in the centre will point in the current direction of travel.
- The coloured icon on the edge of the compass is the direction to the next waypoint or destination. It will always stay in that position.

Vehicle is up

- The vehicle's position arrow in the centre will always point up.
- The compass will rotate as the vehicle's direction changes. Current direction of travel is shown at the top.
- The coloured icon on the edge of the compass will move with the compass.

ORDNANCE SURVEY DATA

Please read this agreement carefully before using the Navigation system.

This is a licence agreement to use the Ordnance Survey (OS) Code-Point data incorporated in the Navigation system. By using this Code-Point data you accept and agree to all of the terms and conditions below.

OWNERSHIP

The OS Code-Point data is licensed by Ordnance Survey with permission of Her Majesty's Stationery Office. © Crown Copyright. All rights reserved.

LICENCE GRANT

OS grants you a non-exclusive licence to use your copy of the OS Code-Point data for your personal use, solely as part of the Navigation system. You may transfer the licence to a subsequent purchaser of the vehicle with which the Navigation system is supplied, provided that the purchaser agrees to abide by each of the terms of this licence.

LICENCE TERMS

These licence terms are governed by English Law and are subject to the exclusive jurisdiction of the English courts.

LIMITATIONS OF USE

The DATABASE is restricted for use in the specific system for which it was created. Except to the extent explicitly permitted by mandatory applicable laws, you may not extract or re-utilise substantial parts of the contents of the DATABASE, not reproduce, copy, modify, adapt, translate, disassemble, decompile, or reverse engineer any portion of the DATABASE.

LIMITATION OF LIABILITY

The price of the DATABASE does not include any consideration for assumption of risk of consequential, indirect or unlimited direct damages, which may arise in connection with your use of the DATABASE.

Accordingly, in no event shall NAVTEQ Corporation or supplier of the Navigation system using the DATABASE ('Supplier') be liable for any consequential, special, incidental or indirect damages, including without limitation, loss of revenue, data, or use, incurred by you or any third party arising out of your use of the DATABASE, whether in an action in contract or tort or based on a warranty, even if NAVTEQ Corporation or the Supplier has been advised of the possibility of such damages. In any event, NAVTEQ Corporation's liability for direct damages is limited to the price of your copy of the DATABASE.

THE DISCLAIMER OF WARRANTY AND LIMITATION OF LIABILITY, SET FORTH IN THIS AGREEMENT, DO NOT AFFECT OR PREJUDICE YOUR STATUTORY RIGHTS WHERE YOU HAVE ACQUIRED THE DATABASE OTHERWISE THAN IN THE COURSE OF A BUSINESS. Some states and laws do not allow the exclusion of implied warranties, so the above disclaimer may not apply to you.

The DATABASE reflects reality as existing before you received the DATABASE and it comprises data and information from government and other sources, which may contain errors and omissions. Accordingly, the DATABASE may contain inaccurate or incomplete information due to the passage of time, changing circumstances and due to the nature of the sources used. The DATABASE does not include or reflect information on - inter alia - neighbourhood safety; law enforcement, emergency assistance, construction work, road or lane closures, vehicle or speed restrictions, road slope or grade, bridge height/weight or other limits, road or traffic conditions, special events, traffic congestion, or travel time.

NAVTEQ CORPORATION

Please read this agreement carefully before using the Navigation system.

This is a licence agreement for your copy of the Navigable Map Database, (the 'DATABASE') originally made by NAVTEQ Corporation), used in the Navigation system. By using this DATABASE you accept and agree to all of the terms and conditions below.

OWNERSHIP

The DATABASE and the copyrights and intellectual property or neighbouring rights therein are owned by NAVTEQ Corporation or its licensors.

LICENCE GRANT

NAVTEQ Corporation grants you a non-exclusive licence to use your copy of the DATABASE for your personal use or for use in your business' internal operations. This licence does not include the right to grant sub-licences.

LIMITATIONS OF USE

The DATABASE is restricted for use in the specific system for which it was created. Except to the extent explicitly permitted by mandatory applicable laws, you may not extract or re-utilise substantial parts of the contents of the DATABASE, not reproduce, copy, modify, adapt, translate, disassemble, decompile, or reverse engineer any portion of the DATABASE.

TRANSFER

You may not transfer the DATABASE to third parties, except together with the system for which it was created, provided that you do not retain any copy of the DATABASE, and provided that the transferee agrees to all of the terms and conditions of this agreement.

DISCLAIMER OF WARRANTY

NAVTEQ Corporation does not warrant or make any representations regarding, either express or implied, regarding the use or results of the use of the DATABASE in terms of its correctness, accuracy, reliability, or otherwise and expressly disclaims any implied warranties of quality, performance, merchantability, fitness for a particular purpose or non-infringement.

NAVTEQ Corporation does not warrant that the DATABASE is or will be error-free. No oral or written information or advice provided by NAVTEQ Corporation, your supplier or any other person shall create a warranty.

LIMITATION OF LIABILITY

NAVTEQ Corporation does not warrant or make any representations regarding, either express or implied, regarding the use or results of the use of the DATABASE in terms of its correctness, accuracy, reliability, or otherwise and expressly disclaims any implied warranties of quality, performance, merchantability, fitness for a particular purpose or non-infringement.

NAVTEQ Corporation does not warrant that the DATABASE is or will be error-free. No oral or written information or advice provided by NAVTEQ Corporation, your supplier or any other person shall create a warranty.

GOVERNMENT END USERS

If the DATABASE is for a region of North America and is being acquired by or on behalf of the United States government or any other entity seeking or applying rights similar to those customarily claimed by the United States government, the DATABASE is licensed with 'limited rights'.

Utilization of the DATABASE is subject to the restrictions specified in the 'Rights in Technical Data and Computer Database' clause at DFARS 252.227–7013, or the equivalent clause for non-defence agencies. Manufacturer of the DATABASE of North America is NAVTEQ Corporation, 10400 W. Higgins Road, Suite 400, Rosemont, Illinois 60018, USA.

EUROPEAN DECLARATION OF CONFORMITY

CE

Hereby, DENSO CORPORATION declares that this DN-NS-019 is in compliance with the essential requirements and other relevant provisions of Directive 1999/5/EC.

SAFETY PRECAUTIONS

Do not smoke, use a naked flame, or cause sparks while refuelling. The resulting fire and explosion may cause serious injury or death.

Avoid exposing the fuel gasses to any potential sources of ignition as the resulting fire and explosion may cause serious injuries and/or death.

Switch off the engine when refuelling, as it is both a source of extreme temperatures, and electrical sparks.

Switch off any personal electronic devices such as mobile phones or music players.

PETROL ENGINED VEHICLES

Do not use leaded fuels, lead substitutes, or fuel additives.

Fuel system cleaning agents should not be used, unless approved by Land Rover.

OCTANE RATING

Your vehicle requires the use of premium unleaded fuel with a minimum octane rating of 95 RON to achieve optimum performance, fuel economy and driveability. If premium unleaded fuel is not available, you may use unleaded fuel with a lower octane rating, down to a minimum of 91 RON , but this may reduce engine performance, increase fuel consumption, cause audible engine 'knock' (a metallic rapping noise from the engine) and other driveability problems.

Do not use fuels with an octane rating lower than 91 RON as severe engine damage may occur.

Note: *Occasional, light, engine knock experienced while accelerating or climbing hills is acceptable.*

If a heavy persistent engine knock is detected, even when using fuel to the recommended octane rating, or if you hear engine knock while holding a steady speed on level roads, consult your Dealer/ Authorised Repairer to have the problem corrected. Failure to do so is misuse of the vehicle, for which Jaguar Land Rover Limited is not responsible. If in doubt seek advice from a Dealer/Authorised Repairer in the territory concerned.

Super Green Plus 98 RON unleaded fuel (where available) may be used as an alternative to the standard 95 RON unleaded fuel.

ETHANOL

This vehicle is not suitable for use with fuels containing more than 10% ethanol. Do not use E85 fuels (85% Ethanol content). Equipment necessary for the use of fuels containing more than 10% Ethanol is not fitted to this vehicle. If E85 fuels are used, serious engine and fuels system damage will occur.

Fuels containing up to 10% Ethanol (grain alcohol) may be used. Make sure the fuel has octane ratings no lower than those recommended for unleaded fuel. Most drivers will not notice any operating difference with fuel containing Ethanol. If a difference is detected, the use of conventional unleaded fuel should be resumed.

Brazil only. Vehicles intended for sale in Brazil can use E22 fuel.

This vehicle is not suitable for use with fuels containing more than 25% ethanol.

METHANOL

Wherever possible avoid using fuel containing methanol.

Use of fuels containing methanol may cause serious engine and fuel system damage. Vehicle performance problems resulting from the use of such fuels is not the responsibility of Jaguar Land Rover Limited and may not be covered under the warranty.

METHYL TERTIARY BUTYL ETHER (MTBE)

Unleaded fuel containing an oxygenate known as MTBE can be used provided that the ratio of MTBE to conventional fuel does not exceed 15%. MTBE is an ether based compound derived from petroleum, which has been specified by several refiners as the substance to enhance the octane rating of fuel.

REFORMULATED GASOLINE

These fuels are specially formulated to further reduce vehicle emissions. Land Rover fully supports all efforts to protect and maintain ambient air quality, and encourages the use of reformulated gasoline where available.

DIESEL ENGINED VEHICLES

Use only high quality diesel fuel in accordance with European Standard EN590 or equivalent.

Do not use RME (bio-diesel) except in the case of those proprietary diesel fuels which contain a mix of up to 7%. Land Rover vehicles can accept no responsibility for damage caused by using RME in concentrations greater than 7%.

The quality of diesel fuel is variable, depending on geographic location. Always use premium or the highest quality fuel available in your locality. High quality fuel makes sure a longer life for your engine components. Lower grade fuel contains higher levels of sulphur, which is detrimental to engine components. If low quality fuel is used, light coloured smoke may be evident at the exhaust.

Prolonged use of additives is not recommended. Do not add paraffin or petrol to diesel fuels.

If you inadvertently fill your vehicle with petrol instead of diesel, do not attempt to start the engine. Contact your Dealer/ Authorised Repairer immediately.

Jaguar Land Rover Limited can accept no responsibility for any damage caused by running your vehicle with fuel other than those stipulated.

SULPHUR CONTENT

If your vehicle is fitted with a Diesel Particulate Filter (DPF) the maximum sulphur content must not exceed 0.005%. Using an incorrect fuel will cause serious damage to the DPF.

The sulphur content of diesel used in Land Rover vehicles should not exceed 0.3% (3000 parts per million).

In some countries diesel will contain higher levels of sulphur, which will require reduced service intervals to reduce the effects on engine components. If in doubt contact a local Land Rover Dealer/Authorised Repairer for advice. See **200, DIESEL PARTICULATE FILTER (DPF)**.

RUNNING OUT OF FUEL

Avoid running out of fuel. Doing so can cause damage to the vehicle's engine, fuel, and emission control systems.

If the vehicle does run out of fuel, a minimum of 4 litres (0.9 gallons) will be required to restart the engine. The vehicle should be left with the ignition on for 5 minutes after refuelling before attempting to restart the engine. The vehicle will need to be driven 1.6 - 5 km (1 - 3 miles) in order to reset the engine management and monitoring systems.

Note: *If the vehicle does run out of fuel, seeking qualified assistance is advisable.*

Diesel engines

Vehicles with diesel engines are equipped with a system to prevent the fuel tank from emptying completely. When the fuel reaches a minimum level, the system will activate a reduced power mode (i.e. the engine will not run properly). This will be followed by the engine stopping in approximately 1.6 km (1 mile).

This feature prevents the fuel system from running dry, which could cause damage to the vehicle. If the gauge indicates low fuel or the warning indicator illuminates, the fuel tank should be refuelled as soon as possible at the next filling station, with at least 4 litres (0.9 gallons) of fuel.

If the system protection function has activated, the vehicle must firstly be refuelled, then restarted using the following procedure:

1. With the brake pedal pressed, press and hold the engine START/STOP button and crank the engine for 5 seconds.
2. Release the START/STOP button.
3. With the brake pedal pressed, press and release the START/STOP button to crank the engine. The engine should start within approximately 5 seconds.

   Note: *If the engine does not start, pause for ten seconds with the ignition in convenience mode, before repeating the procedure from the beginning.*

Do not crank the engine for longer than 30 seconds continuously.

FUEL FILLER FLAP

Take note of all warnings and instructions given on the label affixed to the inside of the filler flap.

The fuel filler flap is located on the right side of the vehicle, at the rear.

1. Make sure the vehicle alarm is un-set and the driver's door is fully unlocked. Press the left side of the flap to unlatch it.
2. Open the flap fully.
3. Twist the cap counter-clockwise to release.
4. Use the retaining clip to keep the filler cap out of the way while fuelling.
5. After refuelling, tighten the cap until it clicks 3 times. Close the filler flap and push until it is latched shut.

FUEL FILLER

When refuelling make sure all windows, doors, and sunroof are fully closed, particularly if young children or animals are in the vehicle.

Do not attempt to fill the tank to its maximum capacity. If the vehicle is to be parked on a slope, in direct sunlight, or high ambient temperature, expansion of the fuel could cause spillage.

Do not operate the auxiliary heater when refuelling the vehicle. Doing so may cause fuel vapours to combust causing a fire/explosion.

Check the fuel pump information carefully, to make sure you are putting the correct fuel into the vehicle.

If the vehicle is filled with incorrect fuel it is essential that you seek qualified assistance before you start the engine.

Filling station pumps are equipped with automatic cut-off sensing to avoid fuel spillage. Fill the tank until the filler nozzle automatically cuts-off the supply. Do not attempt to fill the tank beyond this point.

Note: *Filling station pumps used for diesel commercial vehicles deliver fuel at a higher rate than normal. The higher fill rate can cause premature cut-off and may cause fuel spillage. Therefore, it is recommended that only standard light vehicle pumps are used.*

WATER IN FUEL

If the warning **WATER IN FUEL SEE HANDBOOK** is displayed in the message centre, an excessive amount of water has collected in the fuel filter bowl. Seek assistance from a Land Rover Dealer/Authorised Repairer to have the filter drained as soon as possible.

FUEL TANK CAPACITY

Avoid the risk of running out of fuel and never intentionally drive the vehicle when the fuel gauge indicates that the tank is empty. When refuelling your vehicle after the fuel gauge reads empty, you may not be able to add the fuel quantity shown below, as there will be a small reserve remaining in the tank.

Total tank capacity (usable): Litres (Gallons)	
V8 engines	105 (23.1)
V6 engines	77 (17)

FUEL SPECIFICATION

Petrol	Diesel
91-98 RON	EN 590

Diesel vehicles in Algeria, Egypt, Libya, Morocco, India, Pakistan and Tunisia must only use premium diesel fuel.

DIESEL MISFUELLING PROTECTION DEVICE

The diesel misfuelling protection device may not activate if an unleaded petrol fuel nozzle is only partially inserted.

When the misfuelling device is activated, it may cause fuel to be discharged from the filler neck.

Note: *It is the driver's responsibility to fill the vehicle with the correct fuel. The diesel misfuel protection device only reduces the risk of filling the vehicle with the incorrect fuel.*

Diesel engine vehicles in some markets are equipped with a misfuelling protection device, incorporated into the fuel filler neck.

If the narrow filler nozzle fitted to pumps delivering unleaded petrol is fully inserted into the filler neck, the misfuel protection device will activate.

Note: *The filler spout on some fuel cans and older fuel pumps may trigger the misfuelling device.*

When activated, the yellow misfuel protector will be visible inside the filler neck. It will prevent fuel flow into the tank. Before fuelling can continue with the correct fuel, the device will need to be reset.

The reset tool is located in the luggage compartment.

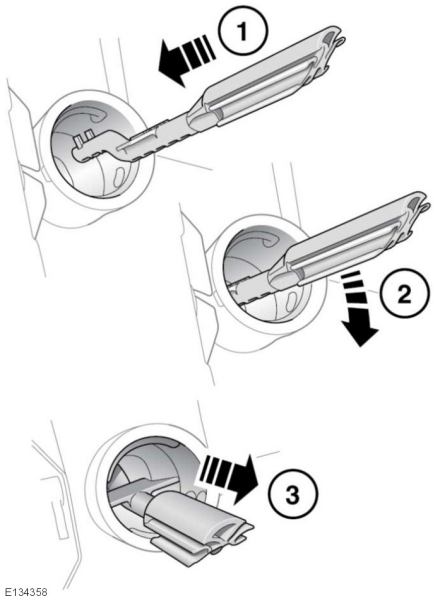

Reset the misfuel protection device as follows:

1. Insert the reset tool (with the teeth uppermost) as far as it will go into the filler neck.
2. Locate the teeth by pushing down the top of the reset tool.
3. WIth the top of the tool pressed down and the teeth engaged, slowly pull the tool out of the filler neck to reset the device.

Do not twist the device, once the teeth have engaged.

Note: *The yellow part of the protection device should no longer be visible in the filler neck.*

Return the reset tool to the luggage compartment.

FUEL CONSUMPTION

The fuel consumption figures shown below have been calculated using a standard testing procedure (the new EC test procedure from Directive 99/100/EC), and produced in accordance with The Passenger Car Fuel Consumption (Amendment) Order 1996.

Under normal use, a vehicle's actual fuel consumption figures may differ from those achieved through the test procedure, depending on driving technique, road and traffic conditions, environmental factors, vehicle load and condition.

Variant (power output)	Urban	Extra-urban	Combined	CO_2 emissions
	l/100 km (mpg)	l/100 km (mpg)	l/100 km (mpg)	g/km
V6 Diesel (258 PS)	8.7 (32.5)	6.8 (41.5)	7.5 (37.7)	199
V6 Diesel (300 PS)	8.3 (34.0)	6.7 (42.2)	7.3 (38.7)	194
V6 Petrol Supercharged (340 PS) *	14 (20.2)	8.8 (32.1)	10.7 (26.4)	326
V8 Petrol Supercharged (510 PS)	18.3 (15.4)	9.7 (29.1)	12.8 (22.1)	298

Note: ** Vehicles fitted with Intelligent stop/start only. Figures for vehicles without Intelligent stop/start not available at the time of printing. See supplement information.*

URBAN CYCLE

The urban test cycle is carried out from a cold start and consists of a series of accelerations, decelerations and periods of steady speed driving and engine idling. The maximum speed attained during the test is 50 km/h (30 mph) with an average speed of 19 km/h (12 mph).

EXTRA-URBAN CYCLE

The extra-urban test cycle is carried out immediately after the urban test. Approximately half of the test comprises steady speed driving, while the remainder consists of a series of accelerations, decelerations and engine idling. The maximum test speed is 120 km/h (75 mph) and the average speed 63 km/h (39 mph). The test is carried out over a distance of 7 km (4.3 miles).

COMBINED

The combined figure is an average of the urban and extra-urban test cycle results, which has been weighted to take account of the different distances covered during the two tests.

For additional information on fuel consumption figures and exhaust emissions, visit the Vehicle Certification Agency (VCA) website at **http://www.vcacarfueldata.org.uk/**.

PARTS AND ACCESSORIES

The fitting of non-approved parts and accessories, or the carrying out of non-approved alterations or conversions, may be dangerous and could affect the safety of the vehicle and occupants and also invalidate the terms and conditions of the vehicle warranty.

Jaguar Land Rover Limited will not accept any liability for death, personal injury or damage to property which may occur as a direct result of fitment of non-approved accessories or the carrying out of non-approved conversions to Land Rover vehicles.

Under no circumstances should any part of the air conditioning system be serviced, dismantled or replaced by anyone other than suitably qualified and certified personnel. Always make sure the correct containment of the refrigerant at all times.

AIRBAG SYSTEM

The components that make up the airbag system are sensitive to electrical or physical interference, either of which could easily damage the system and cause inadvertent operation or a malfunction of the airbag module.

To prevent malfunction of the airbag system always consult your Dealer/Authorised Repairer before fitting any of the following:

- Electronic equipment such as a mobile phone, two-way radio or in-car entertainment system.
- Accessories attached to the front of the vehicle.
- Any modification to the front of the vehicle.
- Any modification involving the removal or repair of any wiring or component in the vicinity of any of the airbag system components, including the steering wheel, steering column, instrument or fascia panels.
- Any modification to the fascia panels or steering wheel.

ANTI-THEFT SYSTEM

No modifications or additions should be made to the anti-theft system. Such changes could cause the system to malfunction.

OWNER MAINTENANCE

Any significant or sudden drop in fluid levels, or uneven tyre wear, should be reported to a qualified technician without delay.

In addition to the routine maintenance, a number of simple checks must be carried out more frequently.

DAILY CHECKS

- Operation of lamps, horn, direction indicators, wipers, washers and warning lamps.
- Operation of seat belts and brakes.
- Look for fluid deposits underneath the vehicle that might indicate a leak.

WEEKLY CHECKS

- Engine oil level.
- Engine coolant check.

- Brake fluid level.
- Dynamic response fluid level.
- Screen washer fluid level.
- Tyre pressures and condition.
- Operate air conditioning.

Note: *The engine oil level should be checked more frequently if the vehicle is driven for prolonged periods at high speeds.*

BRAKE PADS

It is recommended that brake pads should be replaced when they reach a minimum thickness of 3mm.

WHEEL BALANCING

Note: *All wheel assemblies must be dynamically balanced.*

Balance Weight	Inner	Outer
Minimum	10g	10g
Maximum	120g	120g

ARDUOUS DRIVING CONDITIONS

When a vehicle is operated in extremely arduous conditions, more frequent attention must be paid to servicing requirements.

Arduous driving conditions include:

- Driving in dusty and/or sandy conditions.
- Driving on rough and/or muddy roads and/or wading.
- Driving in extremely hot/cold conditions.
- Towing a trailer or driving in mountainous conditions.
- Driving in areas using road salt or other corrosive materials on the driving surface.

Contact a Land Rover Dealer/Authorised Repairer for advice.

DIESEL PARTICULATE FILTER (DPF)

Diesel vehicles equipped with a particle filter have more efficient emission control. The particles in the exhaust gases are collected in the filter during normal driving.

When a DPF message is displayed, accompanied by an amber warning lamp, the filter requires a regeneration cycle to clean itself. This requires the engine to have reached normal operating temperature. Regeneration takes place automatically at an interval of approximately 300-900 km (190-560 miles) depending on driving conditions. Regeneration normally takes 10-20 minutes and is automatically requested by the engine control module if the vehicle is driven steadily at vehicle speeds between 60 km/h to 112 km/h (40 mph to 70 mph). It is possible that the regeneration process will occur at lower vehicle speeds, but the events may take a little longer at a 50 km/h (30 mph) average speed.

Note: *If regeneration is not successfully carried out, the amber warning lamp will eventually be replaced by a red warning lamp.*

Note: *If diesel fuel with a high sulphur content is used regularly, when a DPF regeneration cycle starts the exhaust will emit a cloud of smoke. This is the sulphur deposit being burnt off and is no cause for concern. If possible, use only low sulphur diesel fuel.*

If a DPF message is displayed, accompanied by a red warning lamp, contact a Dealer/Authorised Repairer as soon as possible.

DRIVING SHORT DISTANCES OR IN COLD WEATHER

If the vehicle is frequently driven short distances or in cold weather conditions then the engine may not reach normal operating temperature. This means that regeneration of the diesel particle filter does not take place and the filter is not efficiently cleaned. When the filter reaches a condition when a filter regeneration is appropriate and the current drive style is not appropriate, a warning triangle on the instrument panel illuminates and the message **DPF Full. See manual** is displayed in the Message centre. This is not indicating a fault condition with the vehicle and no dealership support should be required. Start regeneration of the filter by driving the vehicle, preferably on a main road or motorway. The vehicle should then be driven for approximately 20 minutes or more.

When regeneration is complete the warning text is cleared automatically.

Note: *A small increase in fuel consumption may be noticed temporarily during regeneration.*

ROAD TESTING DYNAMOMETERS (ROLLING ROADS)

It is essential that any dynamometer testing is carried out only by a qualified person, familiar with the dynamometer testing and safety procedures practised by Land Rover Dealers/ Authorised Repairers.

SAFETY IN THE GARAGE

If the vehicle has been driven recently, do not touch the engine, exhaust and cooling system components until the engine has cooled.

Never leave the engine running in an unventilated area - exhaust gases are poisonous and extremely dangerous.

Do not work beneath the vehicle with the wheel changing jack as the only means of support.

The jack is designed for wheel changing only. Never work beneath the vehicle with the jack as the only means of support. Always use correctly rated vehicle support stands, before putting any part of your body beneath the vehicle.

Keep your hands and clothing away from drive belts, pulleys and fans. Some fans may continue to operate or start operating after the engine has stopped.

Remove metal wrist bands and jewellery, before working in the engine compartment.

Do not touch electrical leads or components while the engine is running, or with the starter switch turned on.

Do not allow tools or metal parts of the vehicle to make contact with the battery leads or terminals.

FUEL SYSTEM

Under no circumstances should any part of the fuel system be dismantled or replaced by anyone other than a suitably qualified vehicle technician.

Make sure sparks and naked lights are kept away from the engine compartment.

Wear protective clothing, including, where practicable, gloves made from an impervious material.

POISONOUS FLUIDS

Fluids used in motor vehicles are poisonous and should not be consumed or brought into contact with open wounds.

For your own safety, always read and obey all instructions printed on labels and containers.

USED ENGINE OIL

Prolonged contact with engine oil may cause serious skin disorders, including dermatitis and cancer of the skin. Always wash thoroughly after contact.

It is illegal to pollute drains, water courses or soil. Use authorised waste disposal sites to dispose of used oil and toxic chemicals.

OPENING THE BONNET

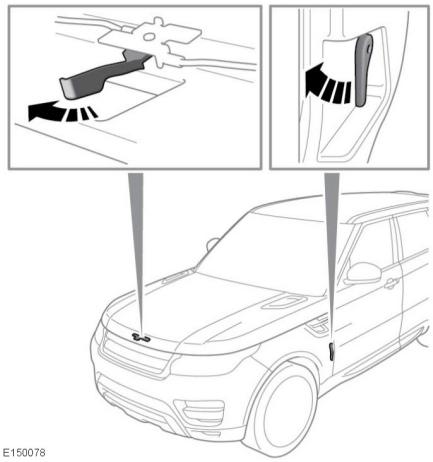

1. Pull the bonnet release lever, located in the left-hand front footwell.
2. Push the bonnet safety catch lever, located underneath the centre of the bonnet at the front, then raise the bonnet.

CLOSING THE BONNET

Do not drive with the bonnet retained by the safety catch alone.

1. Lower the bonnet until the safety catch engages. Using both hands, press the bonnet down until the catches click.
2. Check that both catches are engaged, by trying to lift the front edge of the bonnet.

UNDER BONNET COVERS - REMOVAL

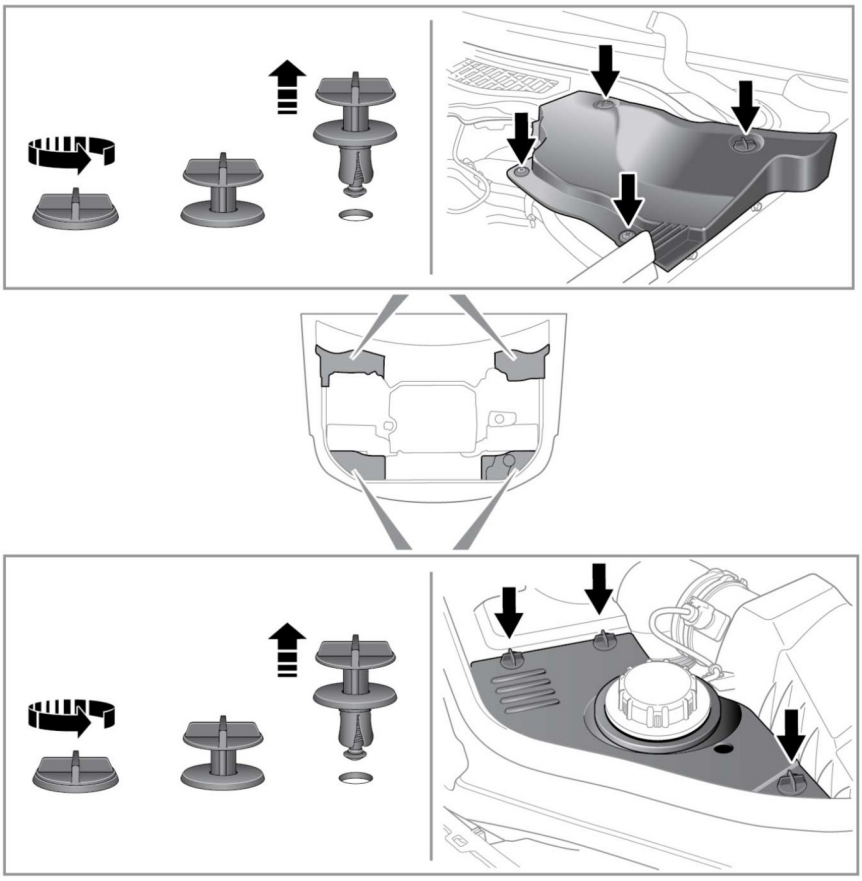

E151131

1. Release and remove the turnbuckle clips securing the cover.
2. Lift the front edge of the cover and slide forwards to remove.

UNDER BONNET COVERS - REFITTING

Before refitting the underbonnet covers, make sure no pipes, cables or other items, have been trapped between the cover and casing.

1. Place the cover over the casing, ensuring the 4 holes are aligned.

2. Push the cover down firmly and fasten the 4 turnbuckle clips.

UNBLOCKING WASHER JETS

Do not operate the washer jets during unblocking or adjustment. Windscreen washer fluid may cause irritation to the eyes and skin. Always read and observe the washer fluid manufacturers instructions.

If a washer jet becomes blocked, use a thin strand of wire to unblock the jet by inserting the wire into the jet. Make sure the wire is completely removed after unblocking. The washer jet position may also be adjusted by inserting the point of a needle into the jet and gently repositioning it.

CHANGING A BULB

All lamps that are either LED or Xenon units and must only be replaced by a Land Rover Dealer/Authorised Repairer.

Before attempting a bulb change, make sure the ignition and the affected lamp are turned off.

Always replace bulbs with the correct type and specification. If you are in any doubt contact your Land Rover Dealer/Authorised Repairer for advice.

Note: *In certain territories it is a legal requirement to carry spare bulbs. A replacement bulb kit is available as an approved accessory from your dealer.*

Note: *After replacing a headlamp bulb, headlamp alignment should be checked with the appropriate equipment.*

HEADLAMP REMOVAL

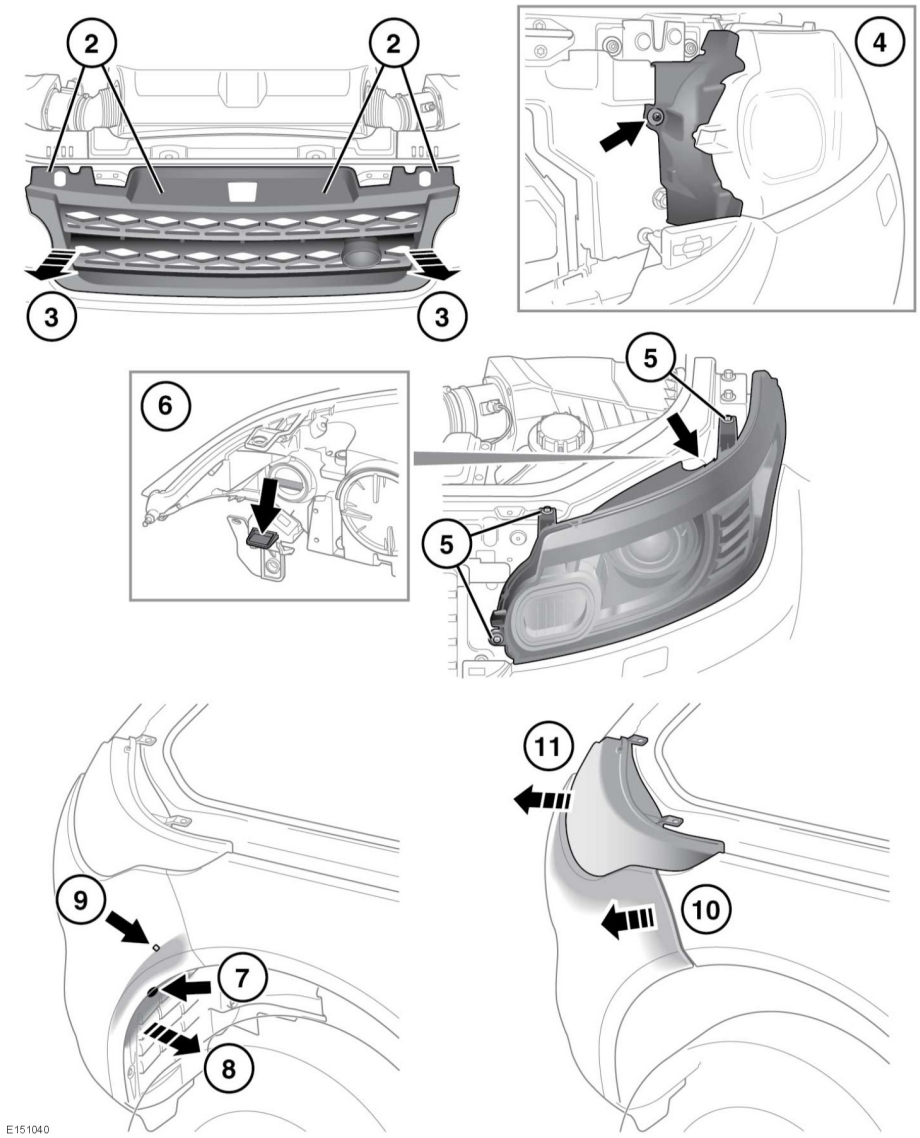

Set the air suspension to the Off-road height position, for increased access to the bumper fixings. See **108, OFF-ROAD HEIGHT**.

1. Remove the under bonnet access cover next to the headlamp to be removed. See **203, UNDER BONNET COVERS - REMOVAL**.
2. Remove the 4 securing clips from the grille.
3. Gently and evenly pull the grille forwards to release the 4 lower clips and remove the grille. Place the grille where it will not be damaged.
4. Remove the fixing and release the covering trim.
5. Remove the 3 retaining bolts from the headlamp.
6. Using a suitable tool, gently apply downward pressure to release the securing clip.

Do not attempt to remove the headlamp at this stage.

7. Remove the fixing from the wing splash shield.
8. Gently pull the splash shield rearward for access.
9. Remove the bumper securing screw.
10. Gently and evenly pull the edge of the bumper to release the 3 securing clips from the wing panel.

Do not use excessive force, as this may cause damage to the vehicle.

Note: *Only limited movement is required to separate the upper edge of the bumper from the lower edge of the headlamp.*

11. Release the electrical connectors and remove the headlamp.
    Place face down on a flat surface covered in a soft material to prevent damage.

Note: *Refitting of the headlamp unit is the reverse of the removal process.*

XENON LAMPS

Replacement or maintenance of Xenon lamps should only be carried out by suitably qualified personnel.

High voltage is required to ignite the gas and metal vapour which are used to power Xenon lamps. Contact with this voltage can cause serious injury.

Xenon lamp units operate at a very high temperature. Make sure the lamp units have cooled before attempting to touch them.

Seek advice about the correct disposal of Xenon lamp units from a Land Rover Dealer/Authorised Repairer, or your local authority.

HALOGEN BULBS

Take care not to touch this type of bulb with your fingers; always use a cloth to handle them. If necessary, clean the bulb with methylated spirits to remove fingerprints.

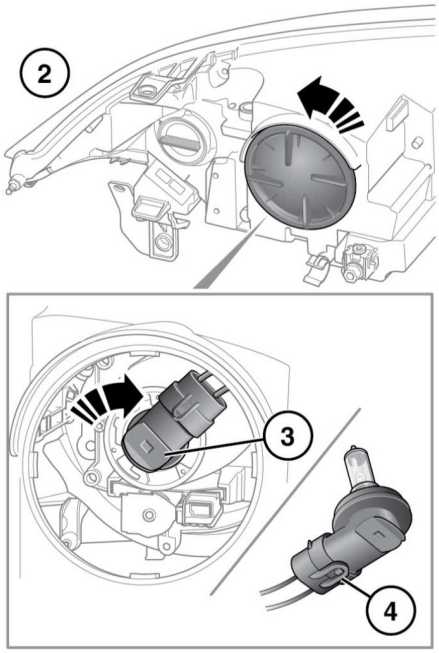

E151046

1. Release the headlamp to gain access. See **205, HEADLAMP REMOVAL**.
2. At the back of the headlamp unit, remove the cover. Turn it counter clockwise to release.
3. Pull off the electrical connector.
4. Release the bulb from the retaining tags and remove bulb.
5. Insert the new bulb and repeat the above procedure in reverse order.

DIRECTION INDICATOR BULB REPLACEMENT

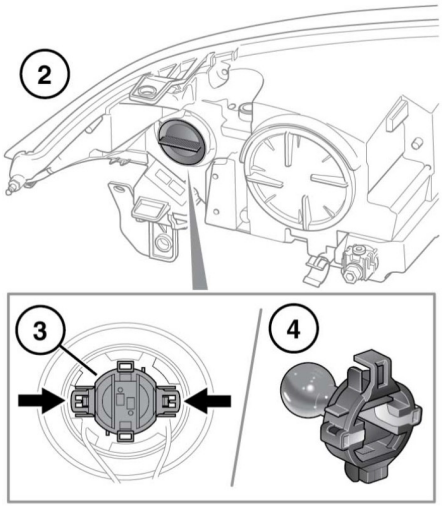

E151051

1. Release the headlamp to gain access. See **205, HEADLAMP REMOVAL**.
2. Twist and lift off the cap.
3. Press the catches and pull the bulb holder from the unit.
4. Push and twist to remove the bulb.

REAR LAMP REMOVAL

To change any of the rear bulbs, it is necessary to completely remove the lamp unit from the vehicle.

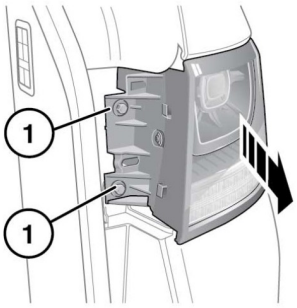

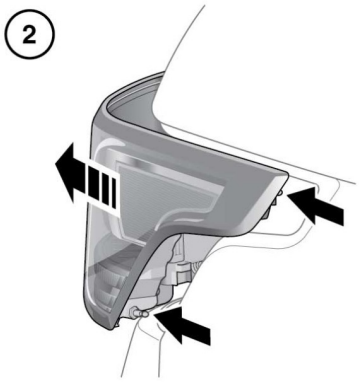

E151038

1. With the tailgate open, remove the trim panel and then remove the 2 screws from the inner edge of the unit.
2. Firmly but carefully pull the unit away from the vehicle, releasing the 2 lugs situated at the rear of the lamp unit.
3. Disconnect the electrical connector and remove the unit from the vehicle. Place face down on a flat surface covered in soft material to prevent damage.

REAR LAMP BULB REPLACEMENT

Note: *The direction indicator lamp, stop lamp, and tail lamp are LED units, and cannot be serviced.*

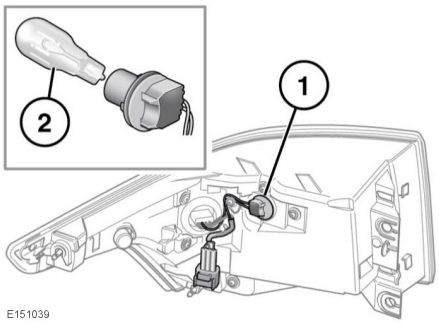

E151039

1. Reversing lamp.
2. Twist the relevant bulb unit and pull to access the bulb. Push, twist and pull to remove the bulb.

REAR FOG LAMP BULB REPLACEMENT

Always find a safe place to stop, off the highway and away from traffic.

Apply the parking brake and engage Park (P).

Switch on the hazard warning lamps.

Place a warning triangle at a suitable distance behind the vehicle, facing towards oncoming traffic.

Disconnect trailer/caravan from vehicle.

Make sure all passengers, and animals, are out of the vehicle and in a safe place away from the highway.

If the vehicle has been driven recently, do not touch the exhaust system components until they have cooled.

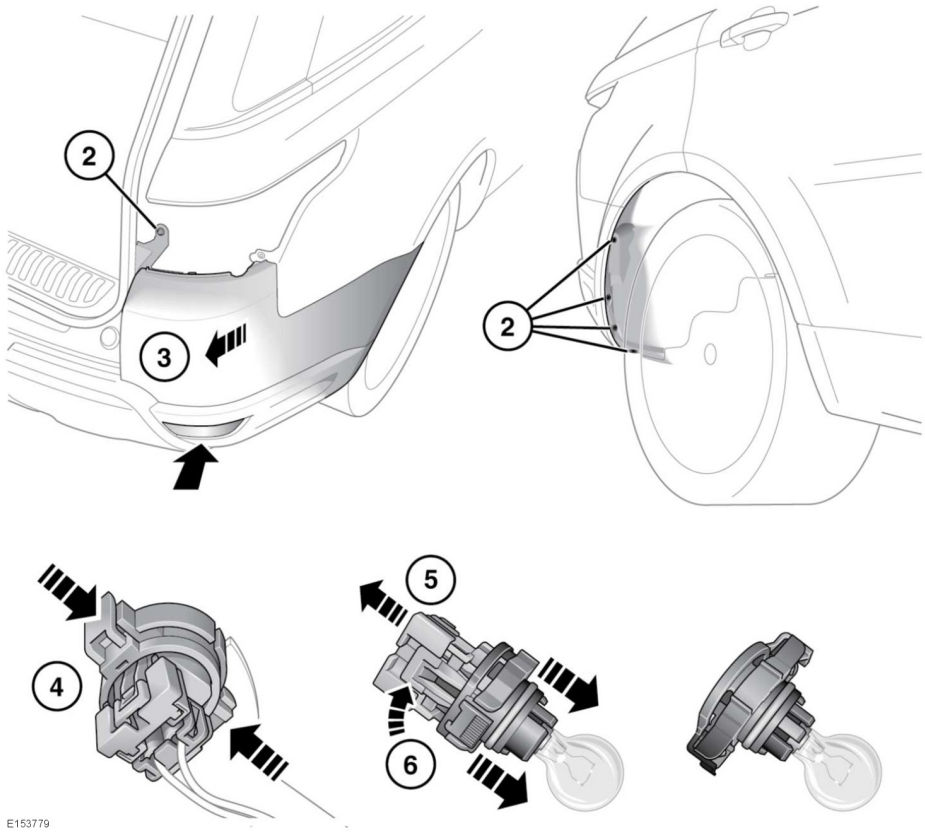

Access to a rear fog lamp housing is from above and behind the rear bumper. The bulb holder is a black plastic unit that incorporates the bulb.

Set the air suspension to the Off-road height position, for increased access to the bumper fixings. See **108, OFF-ROAD HEIGHT**.

1. Remove the rear lamp unit. See **207, REAR LAMP REMOVAL**.
2. Remove the 5 fixings from the bumper.
3. Gently and evenly pull the bumper to release the 8 securing clips from the wing panel.

Do not use excessive force, as this may cause damage to the vehicle.

Note: *Only limited movement is required to allow access to the rear of the fog lamp unit.*

4. To remove the bulb holder, press in the outer wings on the black plastic unit and pull the holder free of the housing.
5. To separate the bulb holder from the electrical connector, first push up the connector lock.
6. Push in the release mechanism while pulling the connector and bulb holder apart.

Note: *Inside the bulb holder, there are three locating lugs. When fitting the new bulb unit, the lugs must line up with the connector correctly.*

Refitting is a reverse of the removal process. Make sure the connector lock is pressed down and that the bulb unit locates securely into the fog lamp housing.

WIPERS SERVICE POSITION

Before changing a front wiper blade, the wiper arms must be set to the winter park position. See **60, WINTER PARK POSITION**.

Note: *The Smart key must remain in the vehicle while wiper blades are replaced.*

WINDOW RESET

The windows will need to be reset if the battery is disconnected, becomes discharged or power supply is interrupted.

Reset as follows:

1. Close the window fully.
2. Release the switch, then lift it to the close position and hold for 1 second.
3. Repeat the procedure on each window.

SUNROOF RESET

If the battery is disconnected or the power supply is interrupted while the sunroof is partially open, it may need to be recalibrated.

Once the battery is reconnected or the power supply is restored, recalibrate the sunroof as follows:

1. Switch the ignition on.
2. With the roof and blind closed, press the front of the roof switch and hold for 20 seconds. See **70, ELECTRIC WINDOWS**.
3. After 20 seconds, the sunroof will begin to move. Release the switch. Within 5 seconds press and hold the front of the roof switch until the blind and roof complete a full open/close cycle.

   Note: *The blind will open first and close last.*
4. Once the blind has stopped moving, release the switch.

The sunroof can now be operated as normal.

CLEANING THE EXTERIOR

Following cleaning of the vehicle exterior (particularly with a pressure washer), it is recommended that the vehicle is taken for a short drive to dry out the brakes.

Remove any heavy deposits of mud and dirt with a hose, before washing the vehicle.

Some high pressure cleaning systems are sufficiently powerful to penetrate suspension joints, door/window seals and damage trim and door locks. Never aim the water jet directly at any cameras, the engine air intake, heater air intakes, body seals (doors, sunroof, windows etc.) or at any components which may be damaged (lights, mirrors, exterior trim, suspension seals and gaiters, etc.). Make sure the pressure washer nozzle is always at a distance of more than 12 inches (300 mm) from any component of the vehicle.

Do not use a power wash system in the engine bay area.

Following cleaning of the vehicle exterior (particularly with a pressure washer), it is recommended that the vehicle is taken for a short drive to dry out the brakes.

Substances which are corrosive, such as bird droppings, can damage the vehicle's paintwork and should be removed as soon as possible.

Use only cleaning products approved for use on vehicles.

Do not apply polish to any unpainted areas of bumper mouldings. It will become ingrained in the textured finish.

UNDER BODY MAINTENANCE

Regularly flush the underbody with plain water, and pay particular attention to areas where mud and debris collect.

If damage or corrosion are detected, have the vehicle checked by a Land Rover Dealer/Authorised Repairer as soon as possible.

CLEANING AFTER OFF-ROAD DRIVING

Make sure the areas around air intakes and the front grille are clean and clear of debris. Pay particular attention to the lower grille, radiator and intercoolers. Failure to do so may cause the engine to overheat, leading to severe engine damage.

Make sure the vehicle underside is cleaned as soon as possible after driving off-road.

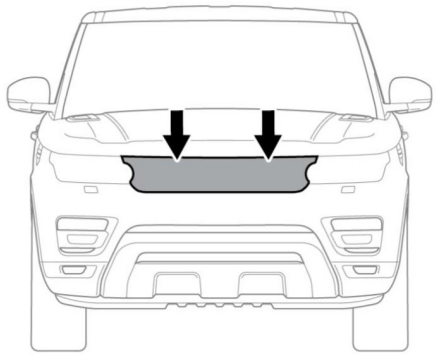

E151911

To improve aerodynamics, some vehicles are fitted with active vanes that open only when the engine temperature rises or when the air conditioning is turned on. The active vanes must be opened manually to allow access to clean any debris from the radiator and the air conditioning condenser after off-road driving.

1. Start the engine and allow it to run for a few seconds. See **97, STARTING THE ENGINE**.
2. Switch off the engine.
3. Switch on the ignition. See **97, SWITCHING ON THE IGNITION**.
4. Select Sand mode on the terrain response system. See **133, TERRAIN RESPONSE OPERATION**.
5. Switch off the ignition.
6. Using a hose pipe, direct clean water through the front bumper (where shown) to remove mud from the radiator and air conditioning condenser.

CLEANING THE INTERIOR

Some cleaning products contain substances that are harmful and can cause health problems if used incorrectly and may cause damage to the interior.

CLEANING FABRIC UPHOLSTERY

Do not polish the instrument panel. Polished surfaces are reflective, and may interfere with the drivers view.

Clean plastic or cloth faced surfaces with warm water and non-detergent soap. Then wipe clean with a soft cloth.

CLEANING LEATHER UPHOLSTERY

Only use cleaning products specifically designed for use on leather. Do not use chemical, alcohol, or abrasive materials, as they will cause rapid deterioration of the leather. The use of products which are not approved will invalidate your warranty.

If you are in any doubt as to which products to use, consult your Land Rover Dealer/Approved Repairer.

Leather should be cleaned and protected at least every six months.

To prevent ingrained dirt and staining, inspect the seat upholstery regularly, and clean every 1 to 2 months as follows:

1. Wipe off fine dust from the seat surfaces using a clean, damp, non-coloured cloth. Avoid over wetting the leather.
2. If this is not sufficient, use a cloth which has been dampened with warm soapy water and then wrung out. Use only mild non-caustic soap.
3. Use Land Rover leather cleaner for heavily soiled areas. Dry off and rub the with a clean soft cloth, changing surfaces regularly.

Use Land Rover leather cleaner several times a year to maintain the leather's suppleness and appearance. The cleaner will nourish and moisturise and help to improve the surface protection film against dust and substances.

- Dark clothing may stain leather seats just like other upholstery products.
- Sharp objects such as belts, zippers, rivets etc can leave permanent scratches and scratch marks on the leather surface.
- Unless spillages such as tea, coffee or ink are washed away immediately, permanent staining may have to be accepted.

If a valet service is used, make sure the specialist concerned is aware of, and follows, these instructions precisely.

Note: *Some materials/fabrics are prone to dye transfer, which can cause unsightly discolouration of lighter coloured leathers. Affected areas should be cleaned and re-protected as soon as possible.*

CLEANING THE SEAT BELTS

Do not allow any water, cleaning products, or fabric from cloths to enter the seat belt mechanism. Any substance which enters the mechanism may affect the performance of the seat belt in an impact.

Extend the seat belts fully, then use warm water and a non-detergent soap to clean. Allow the seat belts to dry naturally while fully extended.

Note: *While cleaning the seat belt, take the opportunity to examine the webbing for damage/wear. Any wear or damage should be reported to, and rectified by, a Land Rover Dealer/Approved Repairer.*

AIRBAG MODULE COVERS

Airbag covers should only be cleaned using a slightly dampened cloth, and a small amount of upholstery cleaner.

Do not allow the airbag covers, or surrounding areas, to become contaminated with liquids. Any substance which enters the mechanism can prevent correct deployment of an airbag during an impact.

CLEANING THE TOUCH SCREEN

- Clean with the cloth provided with the vehicle.
- Do not use chemical agents or domestic cleaners.
- To prevent errors occurring, make sure only one finger at a time is in contact with the screen.
- Do not use excessive pressure.
- Do not allow sharp, hard or abrasive objects to make contact with the screen.
- Avoid exposing the screen to direct sunlight for long periods.

Fluid level checks

FLUID FILLER LOCATIONS

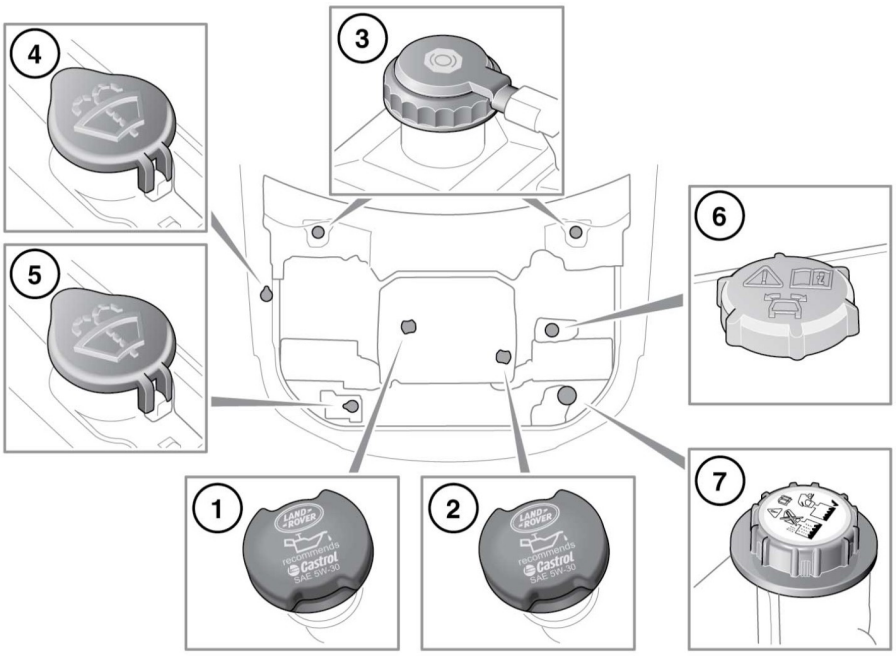

1. Engine oil filler cap (diesel).
2. Engine oil filler cap (petrol).
3. Brake fluid reservoir cap.

   Note: *The brake fluid reservoir cap is always located on the driver's side of the vehicle.*
4. Windscreen washer fluid filler cap (all vehicles).
5. Windscreen washer fluid filler cap (cold climate vehicles only).
6. Dynamic response fluid reservoir cap.
7. Engine coolant filler cap.

Do not drive if there is a possibility that leaked fluid will come into contact with a hot surface, such as the exhaust.

CHECKING THE ENGINE OIL LEVEL

Check the engine oil weekly. If any significant or sudden drop in oil level is noted, seek qualified assistance.

If the message **ENGINE OIL PRESSURE LOW** is displayed, stop the engine as soon as it is safe to do so and seek qualified assistance. Do not start the engine until the cause has been rectified.

Prior to checking the oil level make sure that:

- The vehicle is on level ground.
- The engine oil has reached operating temperature (oil is hot).

- The engine has been switched off for 10 minutes. The system will not give an accurate reading until the oil level has stabilised.

The oil level can then be checked as follows:

1. Switch on the ignition (do not start the engine). See **97, SWITCHING ON THE IGNITION**.
2. Make sure Park (**P**) is selected.
3. Select the **Service Menu** via the instrument panel menu. See **46, INSTRUMENT PANEL MENU**.
4. Select **Oil Level Display**. The current oil level status and topping-up advice is displayed in the instrument panel.
5. Top-up as instructed.

An indication of the oil level is displayed in the gauge. Messages to the right of the gauge advise you of any action you may need to take.

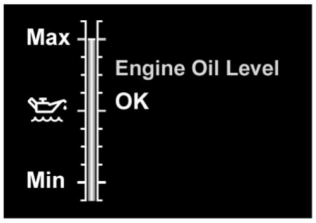

E132659

If the oil level is within the required operating range, the message **Engine Oil Level OK** will be displayed. Do not add any additional oil to the engine.

If the oil level is below the required operating range, a message advising you how much oil to add will be displayed (e.g. **Add 0.5 Litre**). Add the recommended quantity of oil.

If the message **Engine Oil Level Overfilled** is displayed, seek qualified assistance immediately. Do not drive the vehicle as this will cause serious damage to the engine.

If the message **Engine Oil Level Underfilled** is displayed, add 1.5 litres (2.6 pints) of oil, then recheck the level.

If the message **Engine Oil Level Not Available** is displayed, the oil level is stabilising. Switch off the ignition, wait 10 minutes, then recheck the oil level display.

If the warning message **ENGINE OIL LEVEL MONITOR SYSTEM FAULT** is displayed, seek qualified assistance.

TOPPING UP THE OIL

Your vehicle warranty may be invalidated if damage is caused by using oil that does not meet the required specification.

Failure to use an oil that meets the required specification could cause excessive engine wear, a build up of sludge and deposits, and increase pollution. It could also lead to engine failure.

Overfilling with oil could result in severe engine damage. Oil should be added in small quantities and the level re-checked to make sure the engine is not overfilled.

1. Remove the oil filler cap.
2. Add oil as instructed by the display.
3. Clean up any oil spilled during topping-up.
4. Check the oil level again after 10 minutes.

It is essential to use the correct specification oil, and to make sure it is suitable for the climatic conditions in which the vehicle is to be operated. See **258, LUBRICANTS AND FLUIDS**.

Note: *The approximate quantity of oil required to raise the level from **MIN** to **MAX** is 1.5 litres (2.6 pints).*

CHECKING THE COOLANT LEVEL

Running the engine without coolant will cause serious engine damage.

The coolant level in the expansion tank should be checked weekly (more frequently in high mileage or arduous operating conditions). Always check the level when the system is cold.

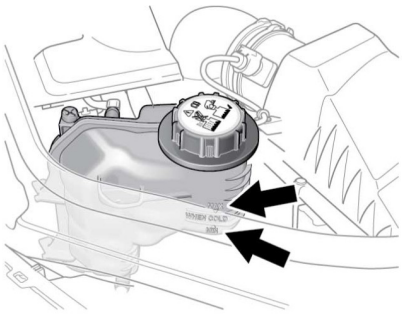

E151133

The under bonnet cover must be removed to check the coolant level. See **203, UNDER BONNET COVERS - REMOVAL**.

Make sure the coolant level remains between the **MIN** and **MAX** indicator marks located on the side of the expansion tank.

If coolant/steam is expelled from the pressure cap or the level has dropped suddenly, or by a large amount, arrange for the vehicle to be examined by a Land Rover Dealer/Authorised Repairer as soon as possible.

TOPPING UP THE COOLANT

Never remove the filler cap when the engine is hot - escaping steam or scalding water could cause serious personal injury.

Avoid spilling antifreeze onto a hot engine - a fire may result.

Unscrew the filler cap slowly, allowing the pressure to escape before removing completely.

Antifreeze is poisonous and can be fatal if swallowed - keep containers sealed and out of the reach of children. If accidental consumption is suspected, seek medical attention immediately.

If the fluid comes into contact with the skin or eyes, rinse immediately with plenty of water.

When travelling in territories where the water supply contains salt, always make sure you carry a supply of fresh (rain or distilled) water. Topping up with salt water will cause serious engine damage.

The use of non-approved antifreeze will have an adverse effect on the engine cooling system and therefore engine durability.

Antifreeze will damage painted surfaces; soak up any spillage with an absorbent cloth immediately and wash the area with a mixture of car shampoo and water.

Top-up to the **MAX** mark, located on the side of the expansion tank. Use only a 50% mix of water and the approved antifreeze. See **258, LUBRICANTS AND FLUIDS**.

The specific gravity of a 50% antifreeze solution at 20°C (68°F) is 1.068 and protects against frost down to -40°C (-40°F).

Antifreeze contains important corrosion inhibitors. The antifreeze content of the coolant must be maintained at 50% ± 5% all year round (not just in cold conditions). To make sure the anti-corrosion properties of the coolant are retained, the antifreeze content should be checked once a year and completely renewed every ten years, regardless of distance travelled. Failure to do so may cause corrosion of the radiator and engine components.

Note: *In an emergency - and only if the approved antifreeze is unavailable - top-up the cooling system with clean water, but be aware of the resultant reduction in frost protection. Do not top-up or refill with conventional antifreeze formulations. If in doubt consult a qualified technician.*

Make sure the cap is tightened fully after top-up is completed by turning the cap until the ratchet cap clicks.

CHECKING THE BRAKE FLUID LEVEL

Brake fluid is highly toxic - keep containers sealed and out of the reach of children. If accidental consumption of fluid is suspected, seek medical attention immediately.

If the fluid comes into contact with the skin or eyes, rinse immediately with plenty of water.

Take care not to spill the fluid onto a hot engine - a fire may result.

Do not drive the vehicle with the fluid level below the MIN mark.

Seek qualified assistance immediately if brake pedal travel is unusually long or if there is any significant loss of brake fluid. Driving under such conditions could result in extended stopping distances or complete brake failure.

If the quantity of fluid in the brake reservoir drops below the recommended level, a red warning lamp in the instrument pack will illuminate. See **49, BRAKE (RED)**.

Note: *If the warning lamp illuminates while the vehicle is being driven, stop the vehicle as soon as safety permits by gently applying the brakes. Check and top-up the fluid level if necessary.*

With the vehicle on level ground, check the fluid level at least every week (more frequently in high mileage or arduous operating conditions).

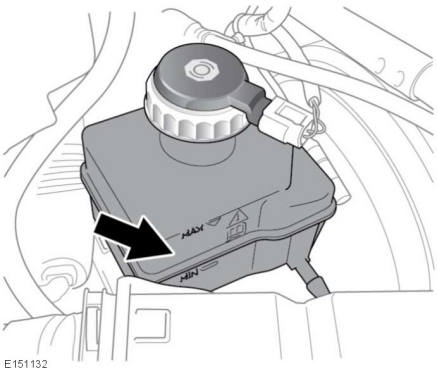

The driver's side cover must be removed to check the brake fluid level. See **203, UNDER BONNET COVERS - REMOVAL**.

The brake fluid must be between the **MAX** and **MIN** marks.

TOPPING UP THE BRAKE FLUID

Brake fluid will damage painted surfaces. Soak up any spillage with an absorbent cloth immediately and wash the area with a mixture of car shampoo and water.

Only use new fluid from an airtight container (fluid from opened containers or fluid previously bled from the system will have absorbed moisture, which will adversely affect performance, and must not be used).

1. Clean the filler cap before removing to prevent dirt from entering the reservoir.
2. Remove the filler cap.
3. Top-up the reservoir to the **MAX** mark using the approved brake fluid. See **258, LUBRICANTS AND FLUIDS**.
4. Replace the cap and reservoir cover.

CHECKING THE WASHER FLUID LEVEL

Some screen washer products are inflammable, particularly if high or undiluted concentrations are exposed to sparking. Do not allow screen washer fluid to come into contact with naked flames or sources of ignition.

If the vehicle is operated in temperatures below 4°C (40°F), use a washer fluid with frost protection. In cold weather, failure to use a washer fluid with frost protection, could result in impaired vision and increase the risk of a vehicle crash.

Do not use an antifreeze or vinegar/water solution in the washer reservoir - antifreeze will damage painted surfaces, while vinegar can damage the windscreen washer pump.

Body panels may suffer discolouration as a result of screen washer fluid spillage. Take care to avoid spillage, particularly if an undiluted or high concentration is being used. If spillage occurs, wash the affected area immediately with water.

TOPPING UP THE WASHER FLUID

The washer reservoir supplies both front and rear screen washer jets and headlamp washer jets.

Check and top-up the reservoir level at least every week. Always top-up with screen washer fluid to prevent freezing.

Operate the washer switches periodically to check that the nozzles are clear and properly directed.

1. Clean the filler cap before removing to prevent dirt from entering the reservoir.
2. Remove filler cap.
3. Top-up the reservoir until the fluid is visible in the filler neck.
4. Replace filler cap.

Cold climate vehicles also feature a supplemental washer reservoir. The same care points described above should be applied to vehicles fitted with a supplemental washer reservoir.

Note: *On vehicles fitted with a supplemental washer reservoir, always check and top-up the main reservoir first.*

CHECKING THE DYNAMIC RESPONSE FLUID LEVEL

Dynamic response fluid is highly toxic. Keep containers sealed and out of reach of children. If accidental consumption of fluid is suspected, seek medical attention immediately.

If the fluid comes into contact with the skin or eyes, rinse immediately with plenty of water.

Do not start the engine if the fluid level has dropped below the **MIN** mark. Severe damage to the Dynamic response system could result.

Seek qualified assistance immediately if there is a noticeable drop in the fluid level.

If fluid loss is slow, the reservoir may be topped-up to the upper level mark to enable the vehicle to be driven to a repair facility for examination. However, it is recommended that you seek qualified assistance before driving the vehicle.

Do not attempt to drive the vehicle to a repair facility, if there is a danger that leaking fluid will come into contact with a hot surface, such as the exhaust.

Check and top-up the fluid level with the engine switched off and the system cold. See **214, FLUID FILLER LOCATIONS**.

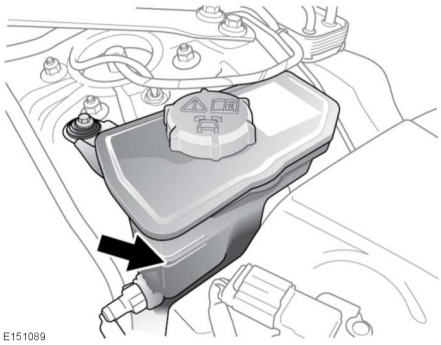

The fluid level should be maintained between the **MIN** and **MAX** marks.

TOPPING UP THE DYNAMIC RESPONSE FLUID

Dynamic response fluid will damage painted surfaces. Soak up any spillage with an absorbent cloth immediately and wash the area with a mixture of car shampoo and water.

Do not fill the reservoir above the **MAX** mark.

1. Clean the filler cap before removing to prevent dirt from entering the reservoir.
2. Remove filler cap.
3. Using the approved fluid, top up the reservoir until the fluid level is between the **MIN** and **MAX** marks. See **258, LUBRICANTS AND FLUIDS**.
4. Replace filler cap.

Vehicle battery

BATTERY WARNING SYMBOLS

Do not allow naked flames or other sources of ignition near the battery, as the battery may emit explosive gases.

Make sure when working near or handling the battery, suitable eye protection is worn, to protect the eyes from acid splashes.

To prevent risk of injury, do not allow children near the battery.

Be aware that the battery may emit explosive gases.

The battery contains acid which is extremely corrosive and toxic.

Consult the handbook for information, before handling the battery.

CONNECTING JUMP LEADS

Do not connect the jump leads to any battery terminal on your vehicle. Doing so may cause a spark, which can result in an explosion. It may also result in damage to the charging system.

Rotating parts of the engine can cause serious injury. Take extreme care when working near rotating parts of the engine.

Before attempting to start a vehicle, make sure that the parking brake is applied, or suitably chock the wheels. Make sure that Park is selected.

Suitable eye protection must be worn when working in the area of the battery.

During normal use, batteries emit explosive gas sufficient to cause severe explosions and capable of causing serious injury - keep sparks and naked lights away from the battery.

Make sure there is no physical contact between the donor and disabled vehicles other than the jump leads.

Make sure that any battery or starting aid is a 12 volt device.

Disconnect the jump leads prior to operating any electrical equipment.

Note: *Before connecting jump leads make sure the battery connections on the vehicle are correct, and that all electrical equipment has been switched off.*

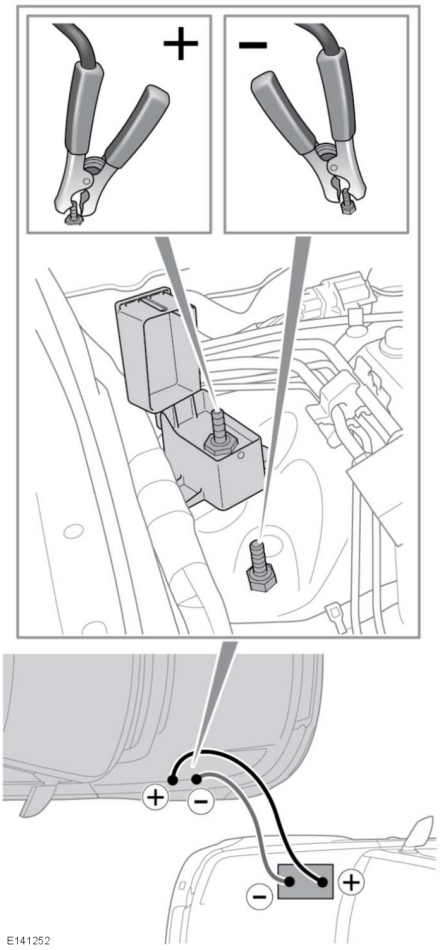

1. Connect 1 end of the positive (Red) jump lead to the positive terminal on the donor vehicle.
2. Connect the other end of the positive (Red) jump lead to the positive jump start terminal on the disabled vehicle.
3. Connect 1 end of the negative (Black) jump lead to the negative terminal on the donor vehicle.
4. Connect the other end of the negative (Black) jump lead to the earth/ground jump start terminal on the disabled vehicle.

   Note: *Check that all cables are clear of any moving components, and that all 4 connections are secure.*
5. Start the engine of the donor vehicle, and allow it to idle for a few minutes.
6. Start the engine of the disabled vehicle.

   Note: *Do not switch on any electrical circuits on the previously disabled vehicle, until after the jump leads have been removed.*
7. Allow both vehicles to idle for a few minutes.
8. Switch off the donor vehicle.
9. Disconnect the negative (Black) jump lead from the previously disabled vehicle.
10. Disconnect the negative (Black) jump lead from the battery of the donor vehicle.
11. Disconnect the positive (Red) jump lead from the previously disabled vehicle.
12. Disconnect the positive (Red) jump lead from the donor vehicle.

CONNECTING A STARTING AID

Do not connect the starting aid to any battery terminal on your vehicle. Doing so may cause a spark, which can result in an explosion. It may also result in damage to the charging system.

To start the vehicle using a starting aid or a slave battery, follow the instructions in the sequence given.

1. Connect the positive (Red) cable to the positive jump start terminal of the disabled vehicle.

2. Connect the negative (Black) cable to the negative jump start terminal of the disabled vehicle.
3. Connect/switch on the starting aid.
4. Start the engine and allow it to idle.
5. Disconnect/switch off the starting aid.
6. Disconnect the negative (Black) cable from the negative jump start terminal of the vehicle.
7. Disconnect the positive (Red) cable from the positive jump start terminal of the vehicle.

CHARGING THE VEHICLE BATTERY

The battery must be disconnected and removed from the vehicle before charging. Failure to do so could result in damage to the vehicle's electrical system.

Battery disconnection, removal and replacement, should only be carried out by qualified personnel. Consult your Dealer/Authorised Repairer.

REPLACING THE VEHICLE BATTERY

Battery disconnection, removal and replacement, should only be carried out by qualified personnel. Consult you Dealer/Authorised Repairer.

Used batteries must be disposed of correctly as they contain a number of harmful substances. Seek advice on disposal from your Dealer/Authorised Repairer and/or your local authority.

BATTERY MONITORING SYSTEM

The Intelligent Power System Management (IPSM) continuously monitors the condition of the main vehicle battery. If excessive battery discharge occurs, the system will begin to shut down non-essential electrical systems in order to protect the battery.

If the IPSM calculates that battery condition is not within set parameters, there are 2 levels of action which can be taken. Both levels have an accompanying message on the Touch screen, and in the case of the low battery warning, in the Message centre.

- **Energy Management**: Will be displayed on the Touch screen if the engine is not running, and system features are causing excessive battery discharge. After 3 minutes the IPSM will begin shutting down vehicle systems. Normal system operation will resume when the engine is started.
- **Low Battery - Please Start Engine**: Will be displayed on the Touch screen and Message centre if the engine is not running. After 3 minutes the IPSM will begin shutting down vehicle systems. Normal system operation will resume when the engine is started.

Only start the engine if it is safe to do so.

Note: *If the message* ***Low Battery - Please Start Engine*** *is displayed, drive the vehicle for at least 30 minutes in temperatures above 0°C (32°F) or at least 60 minutes if temperatures are below 0°C (32°F). This will allow the battery to recover to an acceptable level. If normal system operation is not resumed when the engine is switched back off, the battery may not have been sufficiently charged. If safe to do so, re-start the engine. If problems still exist, contact your Dealer/Authorised Repairer.*

FUSE BOX LOCATIONS

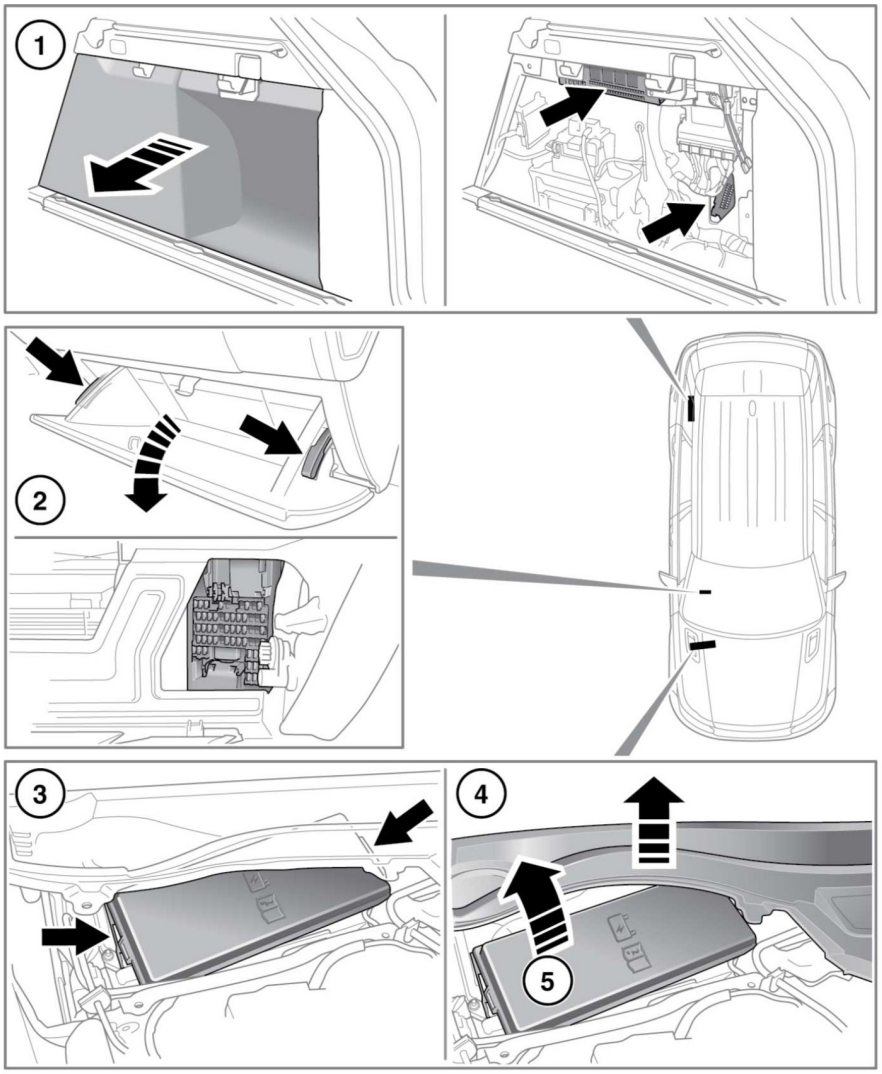

E151912

Fuses

When a fuse box lid is removed, take care to protect the box from moisture, and refit the lid at the earliest opportunity.

1. To access the upper and lower luggage compartment fuse boxes, open the rear tailgate. See **9, OPENING AND CLOSING THE POWERED TAILGATE** Remove the first access panel. Grasp the top of the panel and pull sharply. A label on the rear of the access panel shows the circuits protected and the fuse locations.
   - When refitting the access panel make sure the locating/securing pegs are aligned with their respective holes before pushing the panel fully home.
2. To access the passenger compartment fuse box open the glove box. See**82, STORAGE COMPARTMENTS** Firmly press the top of the support stay at each end, and lower the glove box into the foot well. A label on the rear of the glove box shows the circuits protected and the fuse locations.
3. To access the engine compartment fuse box remove the under bonnet cover. See**203, UNDER BONNET COVERS - REMOVAL**Release the clip at each end of the fuse box cover.
4. Lightly lift up the leaf screen panel to allow the removal of the fuse box cover.
5. Remove the fuse box cover. A label on the inside of the cover shows the circuits protected and the fuse locations.

CHANGING A FUSE

Fit Land Rover approved replacement fuses of the same rating and type, or fuses of matching specification. Using an incorrect fuse, may result in damage to the vehicle's electrical system and can result in a fire.

If the replacement fuse blows after installation, the system should be checked by your Land Rover Dealer/Authorised Repairer.

Note: *Land Rover recommend that relays should only be replaced by qualified persons.*

Always switch off the ignition, and the affected electrical circuit, before replacing a fuse.

ENGINE COMPARTMENT FUSE BOX

Fuse number	Rating (Amps)	Fuse colour	Circuits protected
1	25	White	Engine management system.
2	15	Blue	Engine management system.
3	20	Yellow	Oxygen sensors. (petrol only).
4	10	Red	Cooling Fans. (petrol only).
5	-	-	-
6	10	Red	Engine management system. Active engine mount. (diesel only).
7	15	Blue	Engine management system. (diesel only).
	10	Red	Engine management system. (petrol only).
8	5	Tan	Digital Monitoring Tank Leakage (DMTL) (petrol only).
	15	Blue	Cooling fan. Active grille (diesel only).
9	15	Blue	Oxygen sensors. Glow plug modules. (diesel only).
	5	Tan	Engine management system. (petrol only).
10	20	Yellow	Oxygen sensors. (petrol only).
11	20	Yellow	Oxygen sensors. (petrol only).
12	5	Tan	Adaptive cruise control (ACC). Active cornering enhancement (ACE).
13	10	Red	Exhaust valve (petrol only).
14	5	Tan	Engine management system. (petrol only).
15	30	Green	Intelligent stop/start
16	5	Tan	Electric power assist steering (EPAS).
17	15	Blue	Active cornering enhancement (ACE).
18	5	Tan	Anti-lock braking system (ABS).
19	15	Blue	Charge air cooler (supercharged vehicles only).
20	5	Tan	Engine management system. (petrol only).
21	30	Green	Headlamp wash.
22	-	-	-
23	-	-	-

Fuses

Fuse number	Rating (Amps)	Fuse colour	Circuits protected
24	15	Blue	Horns.
25	30	Green	Rear seats.
26	-	-	-
27	-	-	-
28	10	Red	Heated washer jet.
29	5	Tan	Road pricing. (Singapore vehicles only).
30	15	Blue	Transmission. Terrain response.

PASSENGER COMPARTMENT FUSE BOX

Fuse number	Rating (Amps)	Fuse colour	Circuits protected
1	5	Tan	Radio frequency receiver, Tyre pressure monitoring system (TPMS). Auxiliary heater. Front roof console.
2	-	-	-
3	15	Blue	Front fog lamps.
4	-	-	-
5	5	Tan	Tow bar module.
6	5	Tan	Ignition relay.
7	20	Yellow	Sunroof. Sunblind.
8	10	Red	Message Centre.
9	5	Tan	Electric parking brake (EPB).
10	5	Tan	Front active seatbelts.
11	10	Red	Trailer reverse lamp.
12	-	-	-
13	-	-	-
14	5	Tan	Brake switch.
15	30	Green	Heated rear screen. Radio frequency filter.
16	10	Red	Cubby box cooler.
17	5	Tan	Keyless vehicle module (KVM).
18	-	-	-
19	5	Tan	Engine control module (ECM).
20	10	Red	Heated steering wheel.
21	10	Red	Hill descent switch. Dynamic stability control switch, Seat climate control. Road pricing (Singapore vehicles only). Passenger airbag disable lamp.
22	5	Tan	Electronic transmission switch. Automatic transmission control module. Transfer box, Rear differential. Terrain response switch.
23	5	Tan	Interior lights.
24	-	-	-

Fuses

Fuse number	Rating (Amps)	Fuse colour	Circuits protected
25	-	-	-
26	-	-	-
27	10	Red	Trailer side lamps.
28	20	Yellow	Sunroof. Sunblind.
29	-	-	-
30	-	-	-
31	5	Tan	Rain sensor. Ambient light sensor.
32	25	White	Driver's door.
33	20	Yellow	Dual climate seats.
34	10	Red	Electric fuel flap actuator.
35	-	-	-
36	5	Tan	Battery back-up sounder.
37	20	Yellow	Keyless vehicle module (KVM).
38	15	Blue	Front screen washer
39	25	White	Rear left door.
40	5	Tan	Touch screen display. Driver's door switch pack. Rear climate control.
41	5	Tan	Gateway module.
42	30	Green	Driver's electric seat.
43	15	Blue	Rear screen washer.
44	25	White	Rear right door.
45	30	Green	Passenger electric seat.
46	30	Green	Driver's electric seat.
47	10	Red	Passenger's electric seat.
48	5	Tan	Powered tow bar.
49	5	Tan	Adaptive front lighting (right side unit).
50	5	Tan	Adaptive front lighting (left side unit).
51	5	Tan	Steering wheel switches.
52	20	Yellow	Auxiliary power socket cubby box.
53	15	Blue	Auxiliary power socket luggage compartment.

Fuse number	Rating (Amps)	Fuse colour	Circuits protected
54	15	Blue	Auxiliary power socket rear (right side).
55	20	Yellow	Auxiliary power socket rear (left hand).
56	10	Red	Supplementary restraint systems (SRS).
57	10	Red	Glove box lamp. Front roof console lamps. Windscreen misting sensor.
58	25	White	Passenger door.
59	10	Red	Powered tailgate open/close latch.
60	5	Tan	Seat occupancy module.
61	5	Tan	Immobiliser antenna unit.
62	10	Red	Climate control module.
63	20	Yellow	Front cigar lighter.
64	-	-	-
65	-	-	-
66	5	Tan	Diagnostic socket.
67	-	-	-
68	-	-	-
69	-	-	-

LUGGAGE COMPARTMENT FUSE BOX

FUSE BOX (upper)

Fuse number	Rating (Amps)	Fuse colour	Circuits protected
1	-	-	-
2	25	White	Heated front seat. Climate front seat.
3	25	White	Heated rear seat. Climate rear seat.
4	15	Blue	Heated rear seat. Torch socket.
5	15	Blue	Trailer.
6	15	Blue	Fuel pump (V8 diesel only).
7	5	Tan	Chassis control module.
8	15	Blue	Front seat.
9	-	-	-
10	-	-	-
11	-	-	-
12	-	-	-
13	-	-	-
14	10	Red	Headlamps. Parking aid. Blind spot monitoring. Rear view mirror. Proximity camera.
15	15	Blue	Fuel pump (diesel only).
	30	Green	Fuel pump (petrol only).
16	5	Tan	Adaptive cruise control (ACC).
17	30	Green	Passenger front seat.
18	30	Green	Rear blower motor.
19	30	Green	Electric park brake (EPB).
20	10	Red	Chassis control module.
21	30	Green	Electric park brake (EPB).
22	15	Blue	Trailer.
23	15	Blue	Chassis control module.
24	15	Blue	Event data recorder. Vehicle tracker.
25	30	Green	Deployable sidesteps.

Fuse number	Rating (Amps)	Fuse colour	Circuits protected
26	20	Yellow	Rear wiper.
27	30	Green	Rear seat (left-side).
28	30	Green	Rear seat (left-side).
29	30	Green	Rear seat (right-side).
30	30	Green	Rear seat (right-side).

Fuses

FUSE BOX (lower)

Fuse number	Rating (Amps)	Fuse colour	Circuits protected
1	15	Blue	Touch screen. Front integrated control panel.
2	10	Red	Audio amplifier.
3	-	-	-
4	10	Red	Digital radio. Navigation. Television tuner.
5	15	Blue	Audio head unit.
6	15	Blue	Audio video input/output panel.
7	-	-	-
8	-	-	-
9	-	-	-
10	-	-	-
11	-	-	-
12	-	-	-
13	-	-	-
14	-	-	-
15	15	Blue	Front integrated control panel. Rear integrated control panel. Heating and ventilation.
16	20	Yellow	Fuel fired booster heater.

TYRE MARKINGS

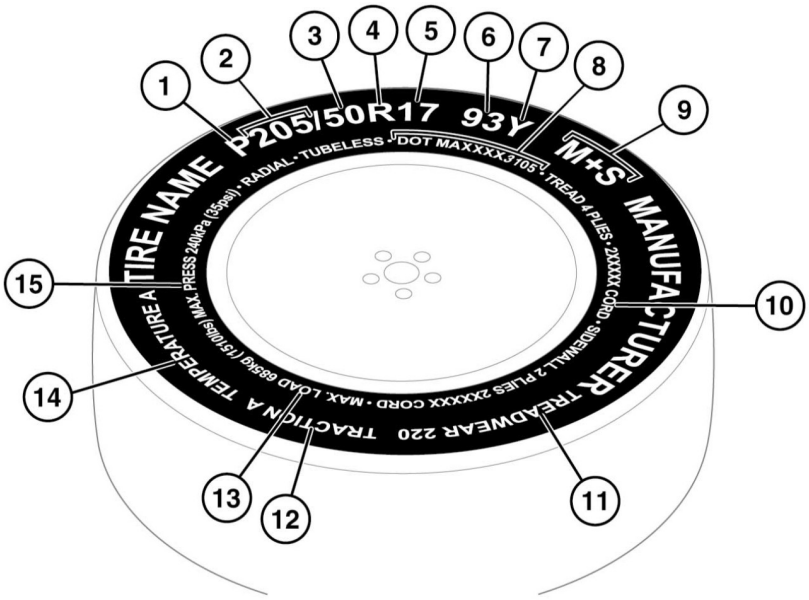

E135318

1. **P** indicates that the tyre is for passenger vehicle use. This index is not always shown.
2. The width of the tyre from sidewall edge to sidewall edge in millimeters.
3. The aspect ratio, also known as the profile, gives the sidewall height as a percentage of the tread width. So, if the tread width is 205 mm and the aspect ratio is 50, the sidewall height will be 102 mm.
4. **R** indicates that the tyre is of Radial ply construction.
5. The diameter of the wheel rim given (in inches).
6. The load index for the tyre. This index is not always shown.

⚠ **The load index and speed rating on all replacement tyres must be, at least, the same specification as the Original Equipment (OE). If in doubt consult your Land Rover Dealer/Authorised Repairer.**

7. The speed rating denotes the maximum speed at which the tyre should be used for extended periods. See **234, SPEED RATING**.
8. Tyre manufacturing standard information, which can be used for tyre recalls and other checking processes. Most of this information relates to the manufacturer, place of manufacture etc. The last four numbers are the date of manufacture. For example, if the number was 5111, the tyre was made in the 51st week of 2011.

9. **M+S** or **M/S** indicates that the tyre has been designed with some capability for mud and snow.
10. The number of plies in both the tread area, and the sidewall area, indicates how many layers of rubber coated material make up the structure of the tyre. Information is also provided on the type of materials used.
11. Wear rate indicator. A tyre rated at 400 for example, will last longer than a tyre rated at 200.
12. The traction rating grades a tyres performance when stopping on a wet road surface. The higher the grade, the better the braking performance. The grades, from highest to lowest are; **AA**, **A**, **B** and **C**.
13. The maximum load which can be carried by the tyre.
14. Heat resistance grading. The tyre resistance to heat is grade A, B or C, with A indicating the greatest resistance to heat. This grading is provided for a correctly inflated tyre, which is being used within its speed and loading limits.
15. The maximum inflation pressure for the tyre. This pressure should not be used for normal driving. See **237, AVOIDING FLAT SPOTS**.

SPEED RATING

Rating	Speed km/h (mph)
Q	160 (99)
R	170 (106)
S	180 (112)
T	190 (118)
U	200 (124)
H	210 (130)
V	240 (149)
W	270 (168)
Y	300 (186)

TYRE CARE

Do not drive the vehicle if a tyre is damaged, excessively worn, or incorrectly inflated.

Avoid contaminating the tyres with vehicle fluids as they may cause damage to the tyre.

Avoid spinning the wheels. The forces released can damage the structure of the tyre, and cause it to fail.

If wheel spin is unavoidable due to a loss of traction (in deep snow for example), do not exceed the 50 km/h (30 mph) point on the speedometer.

Do not exceed the maximum pressure stated on the sidewall of the tyre.

Note: *Tyre condition should be checked after the vehicle has been used off-road. As soon as the vehicle returns to a normal, hard, road surface, stop and check for damage to the tyres.*

All of the vehicle's tyres (including the spare) should be checked regularly for damage, wear and distortion. If you are in any doubt about the condition of a tyre, have it checked immediately by a tyre repair centre or a Land Rover Dealer/Authorised Repairer.

TYRE PRESSURES

All tyre pressures, including the spare, should be checked regularly using an accurate pressure gauge, when the tyres are cold.

Pressure checks should be carried out only when the tyres are cold, and the vehicle has been stationary for more than three hours. A hot tyre at, or below, recommended cold inflation pressure, is dangerously under-inflated.

Never drive your vehicle if the tyre pressures are incorrect. Under-inflation causes excessive flexing and uneven tyre wear. This can lead to sudden tyre failure. Over-inflation causes harsh ride, uneven tyre wear and poor handling.

Do not drive the vehicle with a leaking tyre. Even if the tyre appears to be inflated it could be dangerously under-inflated and will continue to deflate. Replace or contact an approved repairer.

Under-inflation also reduces fuel efficiency and tyre tread life and may affect the vehicle's handling and stopping ability.

If the vehicle has been parked in strong sunlight, or used in high ambient temperatures, do not reduce the tyre pressures. Move the vehicle into the shade and allow the tyres to cool before rechecking the pressures.

The recommended tyre pressures for light and heavy loads are listed on a label located at the base of the driver's door opening.

The loading of the vehicle should always be considered when checking and adjusting tyre pressures.

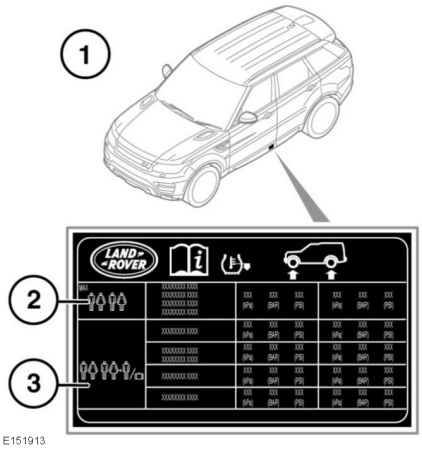

1. Tyre information label location (drivers side).
2. Light load information.
3. Heavy load information.

Check the tyres, including the spare, for condition and pressure on a weekly basis and before long journeys.

If tyre pressures are checked while the vehicle is inside a protected covered area (e.g. a garage) and subsequently driven in lower outdoor temperatures, tyre under-inflation could occur.

A slight pressure loss occurs naturally with time. If this exceeds 14 kPa / 1.4bar / 2 psi per week, have the cause investigated and rectified by qualified personnel.

If it is necessary to check tyre pressures when the tyres are warm, you should expect the pressures to have increased by up to 30 - 40 kPa / 0.3 - 0.4 bar/ 4 - 6 psi. Do not reduce the tyre pressures to the cold inflation pressure under these circumstances. Allow the tyres to cool fully before adjusting the pressures. For standard tyre pressures see **263, WHEEL AND TYRE SIZES**.

If the tyres are deflated to the comfort setting or inflated to the heavy load setting, then the TPMS will have to be adjusted to suit the vehicle load and tyre pressures. See 240, VEHICLE LOADING.

The following procedure should be used to check and adjust the tyres pressures.

To avoid damaging the valves do not apply excessive force or side ways force on the gauge/inflator.

1. Remove the valve cap.
2. Firmly attach a tyre pressure gauge/inflator to the valve.
3. Read the tyre pressure from the gauge and add air if required.
4. If air is added to the tyre, remove the gauge and re-attach it before reading the pressure. Failure to do so may result in an inaccurate reading.
5. If the tyre pressure is too high, remove the gauge and allow air out of the tyre by pressing the centre of the valve. Refit the gauge to the valve and check the pressure.
6. Repeat the process, adding or removing air as required, until the correct tyre pressure is reached.
7. Refit the valve cap.

TYRE VALVES

Keep the valve caps screwed down firmly to prevent water or dirt entering the valve. Check the valves for leaks when checking the tyre pressures. For TPMS tyre valves, see **239, TYRE PRESSURE MONITORING SYSTEM**.

REPLACEMENT TYRES

Always fit replacement tyres of the same type, and wherever possible, of the same make and tread pattern.

The load and speed index ratings on all replacement tyres must be, at least, the same specification as the Original Equipment (OE) see 263, WHEEL AND TYRE SIZES. If in doubt consult your Land Rover Dealer/Authorised Repairer.

Do not rotate tyres around the vehicle.

If the use of tyres not recommended by Land Rover is unavoidable, make sure you read, and fully comply with, the tyre manufacturer's instructions.

When the tread has worn down to approximately 2 mm, wear indicators start to appear at the surface of the tread pattern. This produces a continuous band of rubber across the tread as a visual reminder.

Ideally, tyres should be replaced in sets of four. If this is not possible, replace the tyres in pairs (both front or both rear). When tyres are replaced, the wheels should always be re-balanced and alignment checked.

For the correct tyre specification and pressures see **235, TYRE PRESSURES**

AVOIDING FLAT SPOTS

In areas of extended high ambient temperature, vehicle tyres can be affected by a softening of the tyre sidewall. If the vehicle is stationary for long periods, the effect is to slightly deform the tyre at the point where the tyre meets the standing surface. This is known as a flat spot.

This is normal tyre behaviour. However, when the vehicle is subsequently driven, vibration may be experienced from the flat spot. The condition will steadily improve with additional mileage.

In order to minimise flat spotting, the tyre pressures can be increased to the maximum as stated on the tyre sidewall. Tyres must be returned to the specified running pressures before driving (see **235, TYRE PRESSURES**).

TYRE DEGRADATION

Tyres degrade over time due to the effects of ultraviolet light, extreme temperatures, high loads, and environmental conditions. It is recommended that tyres are replaced at least every six years from the date of manufacture, but they may require replacement more frequently.

USING WINTER TYRES

In many countries legislation exists that requires the use of winter tyres during specified periods of the year.

M+S (mud and snow) tyres have a recognised level of winter performance and need not be replaced. The**M+S** marking on the tyre sidewall indicates an 'all season' tyre designed for use all year round, including cold temperatures, snow and ice.

This symbol identifies dedicated winter tyres, which can be fitted if optimum winter traction is required, or the vehicle is to be used in more extreme winter conditions.

Note: *Dedicated winter tyres often have a lower speed rating than the original equipment tyres, and the vehicle must therefore be driven within the speed limitation of the winter tyre.*

The tyre pressures indicated on the tyre information label are for use in all conditions on the original equipment tyres. If a reduced speed rating tyre is fitted, the recommended pressures are only suitable for use below 160 km/h (100 mph).

For optimum traction, tyres should be run in for at least 160 kilometres (100 miles) on dry roads prior to driving on snow or ice.

Land Rover approved winter tyre sizes	
19 inch wheels	235/65 R19
20 inch wheels	255/55 R20 265/50 R20*
21 inch wheels	265/45 R21 275/45 R21 *
22 inch wheels	275/40 R22

Note: **Studded and non-studded tyres available. Studded tyres are market dependant. Consult a Dealer/Authorised Repairer.*

Use of dedicated winter tyres may require a change of wheel size, depending on original choice of wheel. All four wheels must be changed.

If fitted with standard rubber valves, the Tyre pressure monitoring system (TPMS) warning lamp will flash for 75 seconds and then remain illuminated. The message centre will also display **TYRE PRESSURE MONITORING SYSTEM FAULT**.

When the original wheels and tyres are refitted, the vehicle will need to travel a short distance to reset the TPMS and extinguish the telltale.

For more information on winter tires, contact your Dealer/Authorised Repairer.

USING SNOW CHAINS

Only use traction devices in heavy snow conditions, on compacted snow.

Never exceed 50 km/h (30 mph) when traction devices are fitted.

Never fit traction devices to a temporary use spare wheel.

Land Rover approved traction devices may be used to improve traction on compacted snow in heavy snow conditions. They should not be used in off-road conditions where there is no compacted snow.

If it becomes necessary to fit traction devices where there is no compacted snow, the following points must be observed:

- Only Land Rover approved traction devices should be used on the vehicle. Only Land Rover approved traction devices have been tested to make sure they do not cause damage to the vehicle. Contact your Dealer/Authorised Repairer for information.
- The wheels and tyres fitted must conform to the specifications of the original equipment.
- Full chain traction devices can be fitted to the rear wheels of vehicles fitted with 19 and 20 inch diameter wheels.
- Half chain traction devices can be fitted to the rear wheels of vehicles fitted with 21 and 22 inch diameter wheels.
- Fit traction devices in pairs on the same axle.
- Always read, understand and follow the traction device manufacturer's instructions. Pay particular attention to the maximum speed and fitting instructions.
- Avoid tyre/vehicle damage, by removing the traction devices as soon as the conditions allow.

TYRE DECLARATION (India only)

All imported tyres meet the requirements of Bureau of India Standards (BIS) and comply with the requirements under Central Motor Vehicle Rules (CMVR) 1989. The tyres are the same as those tyres supplied as Original Equipment (OE) for Land Rover models which are fully Type Approved for the Indian market.

TYRE PRESSURE MONITORING SYSTEM

TPMS provides a low pressure warning and does not re-inflate your tyres. Tyre pressures should be checked regularly using an accurate pressure gauge when the tyres are cold.

TPMS can NOT register damage to a tyre. Regularly check the condition of your tyres, especially if the vehicle is driven off-road

When inflating tyres, care should be taken to avoid bending or damaging the TPMS valves. Always make sure correct alignment of the inflation head to the valve stem.

Note: *Non-approved accessories may interfere with the system. If this occurs,* ***TYRE PRESSURE MONITORING FAULT*** *is displayed in the Message centre.*

Note: *Different types of tyre may affect TPMS performance. Always replace tyres in accordance with recommendations.*

TPMS constantly monitors the tyre pressure in each wheel, including the full size spare. Temporary use spare tyres are not monitored. See **240, TEMPORARY USE SPARE WHEEL AND TYRE CHANGE**.

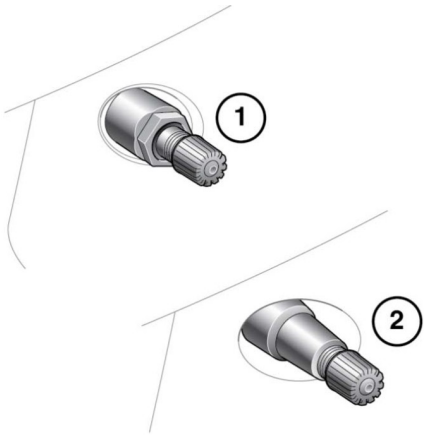

E132513

Wheels fitted with TPMS can be visually identified by the external metal lock nut and valve (**1**). All Land Rover non-TPMS wheels have a rubber valve fitted (**2**).

Note: *At each tyre change, a special service kit is required for each TPMS valve.*

Tyre pressures should be checked regularly when the tyres are cold and adjusted as necessary. The presence of TPMS does not remove the need to do this to ensure vehicle safety. See **235, TYRE PRESSURES**.

The tyre pressure warning lamp (see **51, TYRE PRESSURE MONITORING SYSTEM (YELLOW)**) illuminates when 1 or more of the tyres are significantly under-inflated, accompanied with a message in the Message centre. Stop and check the tyres as soon as possible and inflate them to the recommended pressure for the vehicle loading condition.

TPMS also monitors the full size spare tyre pressure. If the pressure for the spare tyre is incorrect, the message **CHECK SPARE TYRE PRESSURE** is displayed, accompanied by illumination of the warning lamp.

VEHICLE LOADING

When the vehicle is delivered, tyre pressures will be set to those displayed on the tyre pressures label. See **235, TYRE PRESSURES**. These pressures are suitable for loading the vehicle up to GVW (Gross Vehicle Weight). The TPMS will be set to monitor these tyre pressures.

It is possible to select a TPMS light load level that corresponds to a set of reduced tyre pressures. This light load setting is referred to as the Comfort setting and ride comfort will be improved providing the weight restriction for passengers and luggage is not exceeded. See **235, TYRE PRESSURES**.

TPMS levels can be set via the **Vehicle Set-Up** menu in the Message centre. See **46, INSTRUMENT PANEL MENU**.

Note: *The TPMS setting must correspond with the appropriate tyre pressure for the vehicle loading*

Note: *Make sure that the tyre pressures are correct for the vehicle load.*

FULL SIZE SPARE WHEEL AND TYRE CHANGE

The system will automatically recognise any changes in wheel positions. The vehicle must be stationary for 15 minutes during the wheel and tyre change, to make sure the system can detect the change. After driving above 25 km/h (18 mph) any deflation warning should clear within approximately 5 minutes.

TEMPORARY USE SPARE WHEEL AND TYRE CHANGE

If the temporary use spare wheel is fitted, the system will automatically recognise the change in wheel positions. After approximately 10 minutes of driving above 25 km/h (18 mph), the message **FRONT[REAR] RIGHT[LEFT] TYRE PRESSURE NOT MONITORED** will be displayed, accompanied by illumination of the warning lamp.

The warning lamp will first flash and then illuminate continuously. Extended use of the temporary use spare wheel will trigger the message **TYRE PRESSURE MONITORING SYSTEM FAULT**.

This TPMS display sequence will be activated at every ignition cycle until the temporary spare wheel is replaced by a full-size road wheel with a TPMS sensor fitted.

Note: *If in use, always replace the temporary spare wheel before having a TPMS fault investigated.*

TYRE REPAIR KIT

If you are in any doubt regarding your ability to carry out the instructions, contact your Dealer/Authorised Repairer before attempting the repair.

Your vehicle may not be equipped with a spare tyre. If this is the case, in its place in the rear underfloor storage compartment, you will find a tyre repair kit. The tyre repair kit can be used to repair **1** tyre and it is essential that you read the following guide before attempting to repair a tyre.

The tyre repair kit seals most punctures, with a maximum diameter of 6 mm (1/4 inch), within the tread area.

Note: *The sealant used in the tyre repair kit has a shelf life and the expiry date is shown on the tyre sealant bottle. Make sure the container is replaced before the expiry date.*

TYRE REPAIR KIT SAFETY INFORMATION

Some tyre damage may only be partially sealed, or may not seal at all, depending on the amount and type of damage. Any loss of tyre pressure can seriously affect vehicle safety.

Do not use the tyre repair kit if the tyre has been damaged by driving while under-inflated.

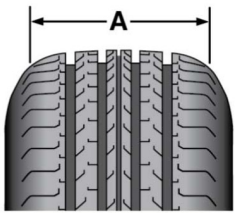

E149963

A - Tyre tread area.

Only use the tyre repair kit to seal damage located within the tyre tread area (A).

Do not use the tyre repair kit to seal damage to the tyre sidewall.

Do not exceed 80 km/h (50 mph) when a repaired tyre is fitted to the vehicle.

The maximum distance that should be driven when a repaired tyre is fitted, is 200 km (125 miles).

When a repaired tyre is fitted, drive with caution and avoid sudden braking or steering manoeuvres.

Only use the tyre repair kit for the vehicle with which it was supplied.

Do not use the tyre repair kit for any other purpose than tyre repair.

Never leave the tyre repair kit unattended when in use.

Only use the tyre repair kit within the -30°C to +70°C temperature range.

Always keep children and animals at a safe distance from the tyre repair kit when in use.

Do not stand directly beside the compressor when it is operating.

Check the tyre sidewall prior to inflation. If any cracks, damage or deformities are apparent, do not inflate the tyre.

Tyre repair kit

Watch the tyre sidewall during inflation. If any cracks, bumps or similar damage, or deformities appear, switch off the compressor and deflate the tyre. Do not continue to use the tyre.

USING THE TYRE REPAIR KIT

Avoid skin contact with the sealant which contains natural rubber latex.

If the tyre inflation pressure does not reach 1.8 bar (26 psi, 180 kPa) within 7 minutes, the tyre may have suffered excessive damage. A temporary repair will not be possible, and the vehicle should not be driven until the tyre has been replaced.

Before attempting a tyre repair, make sure the vehicle is parked safely, as far away from passing traffic as possible.

Make sure the parking brake is applied and transmission Park (**P**) is selected.

Do not attempt to remove foreign objects such as nails, screws, etc. from the tyre.

Always run the engine when using the compressor, unless the vehicle is in an enclosed or poorly ventilated space, as this may cause asphyxiation.

To prevent overheating, do not operate the compressor continuously for longer than 10 minutes.

Note: *All vehicle drivers and occupants should be made aware that a temporary repair has been made to a tyre fitted to the vehicle. They should also be made aware of the special driving conditions imposed when using a repaired tyre.*

REPAIR PROCEDURE

Check the tyre sidewall prior to inflation. If there are any cracks, bumps or similar damage, do not attempt to inflate the tyre. Do not stand directly beside the tyre while the compressor is pumping. Watch the tyre sidewall. If any cracks, bumps or similar damage appear, turn off the compressor and let the air out by means of the pressure relief valve. Do not continue to use the tyre.

If the tyre inflation pressure does not reach 1.8 bar (26 psi, 180 kPa) within 10 minutes, the tyre may have suffered excessive damage. A temporary repair will not be possible, and the vehicle should NOT be driven until the tyre has been replaced.

1. Open the tyre repair kit and peel off the maximum speed label. Attach the label to the fascia in the driver's field of vision. Take care not to obstruct any of the instruments or warning lights.
2. Uncoil the compressor power cable and the inflation hose.
3. Unscrew the orange cap from the sealant bottle receiver and the sealant bottle cap.
4. Screw the sealant bottle into the receiver (clockwise) until tight.

   Note: *Screwing the bottle onto the receiver will pierce the bottle's seal. Once the receiver has been fitted, a ratchet prevents it from being removed.*

5. Remove the valve cap from the damaged tyre.
6. Remove the protective cap from the inflation hose. Connect the inflation hose to the tyre valve making sure the hose is screwed on firmly.
7. Making sure the compressor switch is in the Off (**0**) position, insert the power cable connector into an auxiliary power socket, see **82, STORAGE COMPARTMENTS**. Then switch on the ignition, see **97, SWITCHING ON THE IGNITION**.
8. Switch on the compressor by positioning the switch to the (**I**) position.
9. Inflate the tyre to a minimum of 1.8 bar (26 psi, 180 kPa) and a maximum of 3.5 bar (51 psi, 350 kPa).

   Note: *When pumping the sealant through the tyre valve, the pressure may rise up to 6 bar (87 psi, 600 kPa). The pressure will drop again after approximately 30 seconds.*
10. During the inflation, switch the compressor off briefly, to check the tyre pressure using the gauge mounted on the compressor.

    Note: *It should not take longer than 10 minutes to inflate the tyre. If, after a maximum of 10 minutes, the tyre has not yet reached minimum pressure, the tyre should not be used.*
11. Once the tyre has been inflated to the required pressure, switch off the compressor. If desired, the ignition may be turned off after the compressor has been turned off.
12. Remove the power connector from the auxiliary power socket.
13. Remove the inflation hose from the tyre valve, by unscrewing it as quickly as possible (counter clockwise).
14. Replace the inflation hose protective cap and the tyre valve cap.
15. Make sure the tyre repair kit (including the bottle and receiver caps) are placed securely in the vehicle. You will need to use the kit to check the tyre pressure after a maximum of 3 km (2 miles), so make sure they are easily accessible.
16. Immediately drive the vehicle for a maximum of 3 km (2 miles), to allow the sealant to coat the inner surface of the tyre and form a seal at the puncture.

CHECKING THE TYRE PRESSURE AFTER A REPAIR

⚠ **When driving the vehicle, if you experience vibrations, abnormal steering, or noises, reduce speed immediately. Drive with extreme caution and reduced speed, to the first safe place to stop the vehicle. Visually examine the tyre and check its pressure. If there are any signs of damage or deformity to the tyre, or the tyre pressure is below 1.3 bar (19 psi, 130 kPa), do not continue driving.**

⚠ **Consult a tyre repair centre or your Dealer/Authorised Repairer, for advice concerning the replacement of a tyre after using a tyre repair kit.**

1. Drive the vehicle for 3 km (2 miles) then stop in a safe place. Carry out a visual examination of the tyre's condition.
2. Make sure that the sealant container section is in its original position.
3. Screw the inflation hose connector firmly onto the tyre valve.
4. Read the tyre pressure from the gauge.

Tyre repair kit

5. If the pressure of the sealant filled tyre is above 1.3 bar (19 psi, 130 kPa) adjust the pressure to the correct value.
6. Make sure the compressor switch is in the Off (**O**) position and insert the power cable connector into the auxiliary power socket. If the vehicle is in a well ventilated area, start the engine.
7. Switch the compressor to On (**I**) and inflate the tyre to the correct pressure.
8. To check the tyre pressure, turn off the compressor then read the pressure from the gauge.
9. When the compressor is off, if the tyre pressure is too high, release the required amount of pressure using the pressure release valve.
10. Once the tyre is inflated to the correct pressure, switch off the compressor and remove the power plug from the auxiliary socket.
    - The use of the tyre repair kit sealant may lead to error prompts and incorrect readings of the Tyre Pressure Monitoring System. Therefore, use the tyre repair kit pressure gauge to check and adjust the damaged tyre's inflation pressure.
11. Unscrew the inflation hose connector from the tyre valve, replace the tyre valve cap and the inflation hose connector protective cap.
12. Make sure the tyre repair kit is placed securely in the vehicle.
13. Drive to the nearest tyre repair centre or Dealer/Authorised Repairer, for a replacement tyre to be fitted. Make sure you make the repair centre aware that the tyre repair kit has been used before the tyre is removed.
14. Both the tyre inflation hose, and the sealant container should be replaced once a new tyre has been fitted.

Only sealant containers which are completely empty should be disposed of with normal household waste. Sealant containers which contain some sealant, and the tyre inflation hose, should be disposed of by a tyre specialist or your Dealer/Authorised Repairer, in compliance with local waste disposal regulations.

WHEEL CHANGING SAFETY

Before raising the vehicle or changing a wheel, make sure you read and comply with the following warnings.

Always find a safe place to stop, off the highway and away from traffic.

Make sure the vehicle and jack are both on firm level ground. Do not jack the vehicle if it is over a metal grating or manhole cover.

Apply the parking brake and engage Park (P).

Make sure the air suspension is set to off road height.

Switch on the hazard warning lamps.

Make sure the front wheels are in the straight ahead position.

Disconnect trailer/caravan from vehicle.

Make sure all passengers and animals, are out of the vehicle and in a safe place away from the highway.

Place a warning triangle at a suitable distance behind the vehicle, facing towards oncoming traffic.

TOOL KIT

Note: *Tool types and positions may vary from the illustration.*

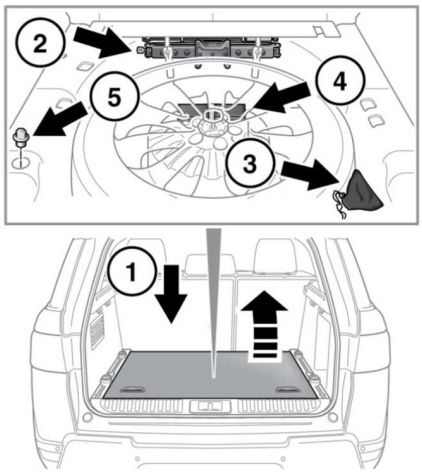

E151140

1. Loadspace floor panel.
2. Jack.
3. Spare wheel assist lift tool.
4. Tool kit - located under the spare wheel. See **245, REMOVING THE SPARE WHEEL**
5. Locking wheel nut adaptor.

Note: *Examine the jack occasionally, clean and grease the moving parts, particularly the screw thread, to prevent corrosion.*

Note: *Take careful note of the stowage position for each tool, as it is important to return them to their correct position after use.*

REMOVING THE SPARE WHEEL

Remove the spare wheel before jacking the vehicle, to avoid destabilising the vehicle when raised.

Wheels are heavy and if handled incorrectly may cause injury. Use extreme caution when lifting, lowering and manoeuvring the wheels.

Wheel changing

Always secure the spare wheel, or the removed wheel, in the correct position using the retaining bolt.

Do not stow the wheel while the vehicle is raised on the jack.

After wheel changing, always secure tools, chocks, jack and replaced wheel in their correct stowage positions. Such objects, if not properly stowed, can become flying missiles in a crash or rollover, potentially causing injury or death.

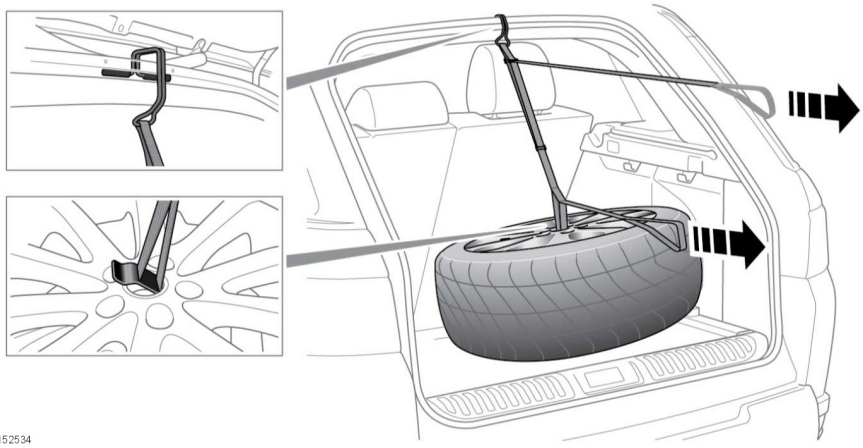

Always remove the spare wheel before jacking the vehicle.

Note: *Before removing the spare wheel, take note of its stowage position. The wheel to be changed must be correctly stowed and secured in its place.*

Note: *The spare wheel lift assist tool is not fitted to all vehicles. For more information, contact your Dealer/Authorised Repairer.*

1. Open the tailgate. See **9, OPENING AND CLOSING THE TAILGATE/9, OPENING AND CLOSING THE POWERED TAILGATE**.
2. Remove the loadspace floor panel.
3. Remove the spare wheel retaining bolt.
4. Remove the vehicle jack and the spare wheel lift assist tool. See **245, TOOL KIT**
5. Attach the lift assist tool as shown.
   - Pull the upper strap to lift up the spare wheel.
   - Pull the lower strap to place the spare wheel on the tailgate.
6. Remove the tool and carefully lift the spare wheel from the vehicle.

Note: *Reverse the order to stow the changed wheel.*

USING WHEEL CHOCKS

Before raising the vehicle, the wheel diagonally opposite the one to be removed must be chocked.

Always chock the wheels using suitable wheel chocks. Place the chocks on both sides of the wheel diagonally opposite the wheel to be changed.

If jacking the vehicle on a slope is unavoidable, place the chocks on the downhill side of both wheels on the axle not being raised.

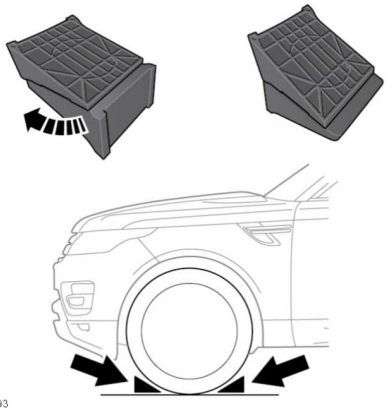

Wheel chocks are stowed in the tool kit.

1. Remove the chocks from the tool kit.
2. Pull the two halves slightly apart and twist fully to increase the wedge profile.
3. Position the vehicle on level ground. Both chocks must be used. Position them on opposite sides of the wheel and push them firmly against the tyre.

LOCKING WHEEL NUTS

Locking wheel nuts can be removed and installed using only the special adaptor provided in the tool kit.

Note: *When the vehicle is first supplied, the wheel nut adaptor may be stored in the glove box. If this is the case, the wheel nut adaptor must be moved to its correct storage position in the luggage compartment, as soon as possible. See* ***245, TOOL KIT***

Note: *A code number is stamped onto the underside of the adaptor. This number should be recorded in the Service Portfolio supplied with the literature pack. If a replacement adaptor is required, you will be asked to quote this number.*

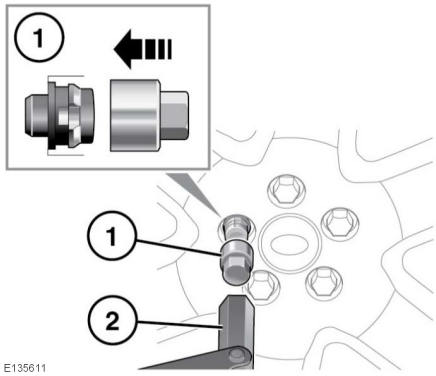

To release

1. Insert the wheel nut adaptor into the locking wheel nut, making sure it is fully engaged.
2. Locate the wheel brace over the adaptor and unscrew the wheel nut half a turn anticlockwise.
3. After raising the vehicle on the jack, remove the locking wheel nut.

Note: *After use, store the wheel nut adaptor correctly in the tool kit.*

WHEEL CHANGING

Before raising the vehicle or changing a wheel, make sure that you read and comply with the following warnings:

Wheel changing

Make sure the jack is on firm, level ground.

Never place anything between the jack and the ground, or the jack and the vehicle.

Position the jack from the side of the vehicle, in line with the appropriate jacking point.

Do not attempt to raise the vehicle, unless the jack head is fully engaged in the jacking point. Only jack the vehicle using the approved jacking points.

WARNING - THAT NO PERSON SHOULD PLACE ANY PORTION OF THEIR BODY UNDER A VEHICLE THAT IS SUPPORTED BY A JACK.

The jack is designed for wheel changing only. Never work beneath the vehicle with the jack as the only means of support. Always use correctly rated vehicle support stands, before putting any part of your body beneath the vehicle.

Always use the complete jacking lever assembly throughout the tyre changing process, to minimise any chance of accidental injury.

Take care when loosening the wheel nuts. The wheel brace may slip off if not properly attached and the wheel nuts may give way suddenly. Either unexpected movement, may cause an injury.

Do not start or run the engine while the vehicle is supported only by a jack.

Only jack the vehicle using the jacking points described, or damage to the vehicle could occur.

Note: *Your vehicle may be fitted with a tilt sensor, which activates the alarm if the vehicle is tilted in any direction after it has been locked. To lock the doors while changing the wheel, and avoid the alarm activating, tilt sensor can be temporarily disabled. See* ***46, INSTRUMENT PANEL MENU****.*

Note: *If side steps or tubes are fitted, the jacking points are located on the underside of the side step or tube brackets.*

Note: *Before raising the vehicle, correctly position the wheel chocks. See* ***246, USING WHEEL CHOCKS****.*

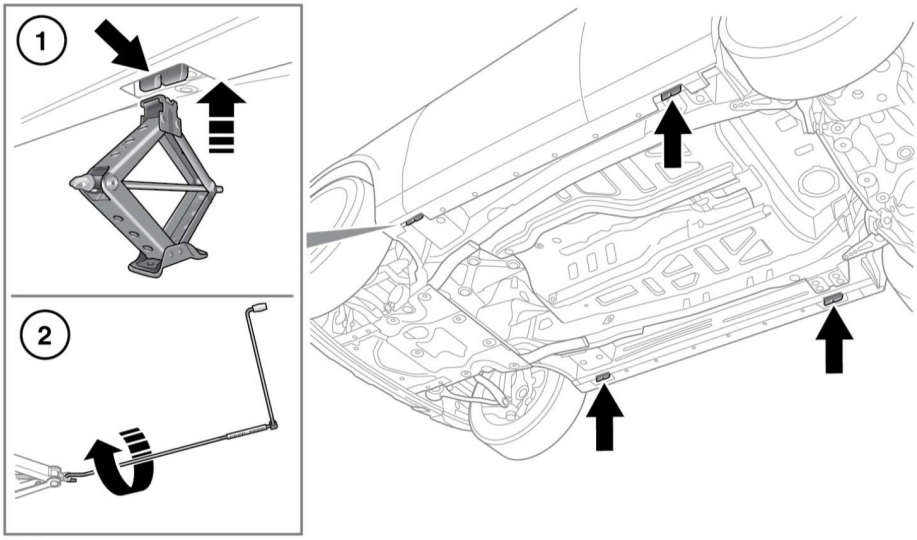

E142348

1. Before raising the vehicle, use the wheel nut brace to slacken the wheel nuts of the wheel to be replaced by half a turn counter-clockwise.
2. Position the jack under the relevant jacking point, of the vehicle.

   Note: *Do not allow the jack to contact the sill at any other point, as damage may result.*
3. Turn the jack lever clockwise to raise until the jack locates into the jacking point. Make sure the base of the jack is in full contact with the road surface.
4. Raise the vehicle with the jack, until the tyre being lifted just clears the ground. Operate the jack with a slow and steady motion. Avoid sudden and erratic actions, as they may cause the vehicle/jack to become unstable.
5. Remove the wheel nuts and place them together where they cannot roll away.
6. Remove the wheel and place to one side. Do not lay the wheel on its face, as this may damage the finish.
7. Fit the spare wheel to the hub.
8. Re-fit the wheel nuts and lightly tighten them. Make sure the wheel is making contact with the hub evenly.
9. Ensure that the space under the vehicle is clear of obstructions, then lower the vehicle slowly and smoothly.
10. With all of the wheels on the ground and the jack removed, fully tighten the wheel nuts. The wheel nuts must be tightened in sequence (see illustration) to the correct torque of 133 Nm (98 lb.ft).

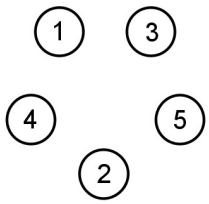

E132675

Note: *If it is not possible to torque the wheel nuts when a wheel is replaced, they should be set to the correct torque as soon as possible.*

If an alloy spare wheel is to be fitted, using a suitable blunt tool, knock the centre cap out of the removed wheel. Using hand pressure only, press the centre cap into the newly fitted spare.

Check and adjust the tyre pressure as soon as possible.

IMPORTANT – USE OF SPARE TYRE

Always adhere to the instructions given on the temporary use spare wheel warning label; failure to comply can be dangerous.

Where fitted, the temporary-use spare wheel is FOR TEMPORARY USE ONLY. Drive with caution while the temporary spare wheel is fitted. Make sure that an original size wheel and tyre are fitted as soon as possible.

Do not fit more than one temporary-use spare wheel on the vehicle, at any one time.

Do not exceed 80 km/h (50 mph) while the temporary spare wheel is fitted.

The temporary-use spare wheel must be inflated to 4.2 bar (60 psi, 420 kPa).

DSC must be switched on while the temporary spare wheel is in use.

Traction devices, such as snow chains, cannot be used with a temporary spare wheel.

TOWING EYES

The towing eyes at the front and rear of the vehicle are designed for on-road recovery only. If they are used for any other purpose, it may result in vehicle damage and serious injury.

Remove the front and rear towing eye covers before driving off-road, to prevent damage or loss.

The front and rear towing points are located behind removable covers.

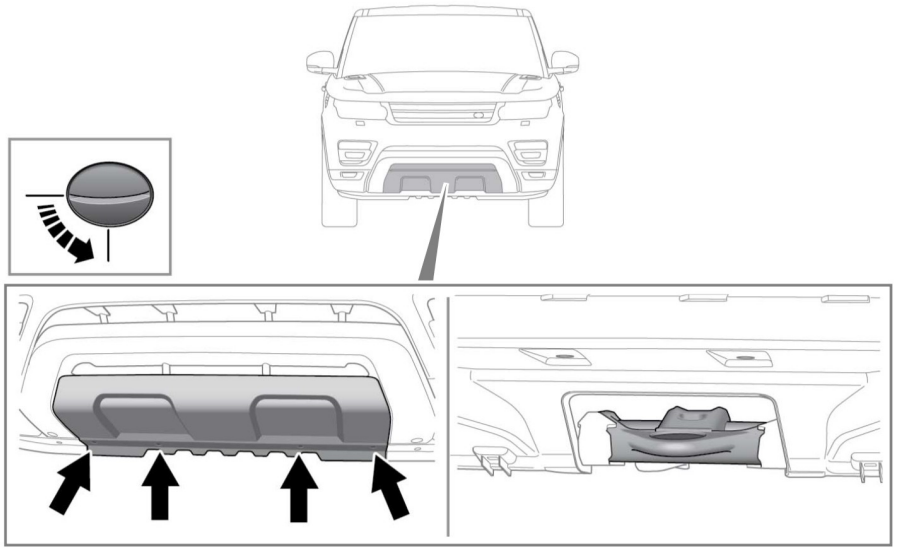

E151143

1. To release the front cover, rotate each of the fasteners 90 degrees counter clockwise with a coin (or similar).
2. To remove the cover, lower the top edge and then pull the cover forwards. When refitting, first make sure that the 2 lugs at the bottom edge of the cover engage with the holes in the body panel and then secure into position by rotating each of the fasteners 90 degrees clockwise.

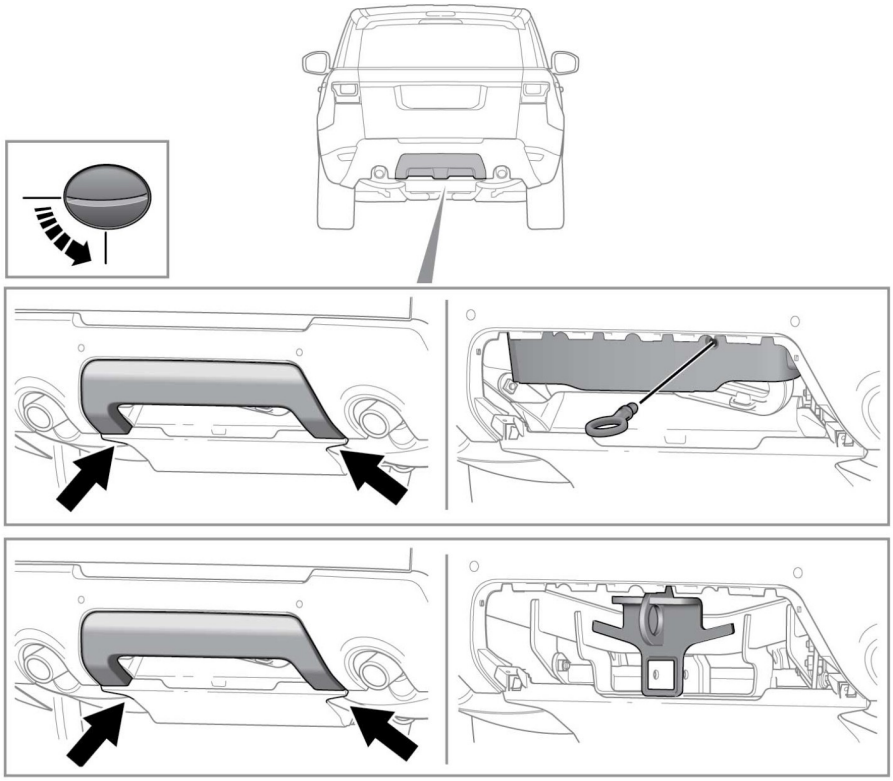

E151144

1. To release the rear cover, rotate each of the fasteners 90 degrees counter clockwise with a coin (or similar), to release the lower edge.
2. Rotate the cover to release the hooks at the top. Remove the cover.
3. For vehicles fitted with a Powered tow bar, a towing eye is included in the tool kit, located in the underfloor area of the loadspace.
4. Screw the towing eye anticlockwise into its fixing, until secure. Use the wheel jack lever to apply extra leverage to the towing eye.
5. When refitting the rear cover, make sure that the 4 hooks on the top edge of the cover engage in the body panel and then secure into position by rotating each of the fasteners 90 degrees clockwise.

The rear towing point may be used to tow another vehicle, if required.

STEERING COLUMN UNLOCKING

During vehicle recovery, the Smart key must remain inside the vehicle and the ignition must be switched on to make sure that the steering column is unlocked.

OFF-ROAD RECOVERY

If the towing eyes are to be used for off-road recovery, it is essential that off-road driver training covering recovery techniques is undertaken.

Further information regarding off-road driver training can be found at http://www.landroverexperience.com

TRANSPORTING THE VEHICLE

The recommended method for recovery/transporting the vehicle is by a trailer designed for that purpose.

Always use qualified persons to perform recovery and to make sure the vehicle is secured correctly.

WARNING: Use extreme caution when moving or towing the vehicle. Death or serious injury may occur.

If the vehicle's electronics are operational, the Air suspension must be set to Access height, before securing the vehicle to a recovery vehicle or trailer. See**109, ACCESS HEIGHT**.

TOWING THE VEHICLE ON FOUR WHEELS

The vehicle should be recovered with all four wheels clear of the ground, i.e., on a trailer. However, if the vehicle cannot be recovered by using the correct method, in an emergency the vehicle can be towed on all four wheels for a short distance. Please adhere to the following guidelines.

The recovery agent MUST activate the Emergency Park Release before towing commences. This procedure is covered in a separate publication for service personnel.

If transmission Neutral (N) is selected and the engine is then switched off, the transmission will wait for 10 minutes before automatically selecting Park (P). At this point, if the Emergency Park Release has not been activated and the vehicle is being towed, serious damage to the transmission will result. There is also a danger to personal safety.

If the engine cannot be used during towing, there will be no power assistance to the braking system. This will result in a much greater effort to stop the vehicle and in a greatly increased stopping distance.

If the vehicle battery is to be disconnected, the steering column must be unlocked first. It is not possible to unlock the steering column with the battery disconnected.

Always make sure the steering column is unlocked prior to recovery.

Only tow the vehicle in a forward direction with all four wheels on the ground. Towing in a reverse direction or with only two wheels on the ground, will cause serious damage to the transmission.

Do not tow the vehicle for more than 50 km (30 miles). Do not exceed 50 km/h (30 mph). Towing for a greater distance or at a higher speed may result in serious damage to the transmission.

Do not tow the vehicle if the transmission cannot be set in Neutral (**N**), or if the rear electronic differential has failed in the locked position.

The following procedure must be carried out carefully to prevent damage to the vehicle:

1. Secure the towing attachment from the recovery vehicle to the front towing eye.**251, TOWING EYES**
2. With the parking brake applied, switch on the ignition and ensure the steering lock is disengaged.
3. Apply the foot brake and rotate the selector to Neutral (**N**).
4. Activate the Emergency Park Release.
5. Leave the Smart key in a secure place inside the vehicle.
6. Release the parking brake before towing the vehicle.

Leaving the ignition switched on for extended periods will drain the vehicle's battery.

AFTER TOWING ON FOUR WHEELS

1. Apply the parking brake.
2. Switch on the ignition and apply the foot brake.
3. Rotate the gear selector to Park (**P**)
4. Deactivate the Emergency Park Release.
5. Switch off the ignition and remove the Smart key from the vehicle.
6. Remove the recovery vehicle towing attachment from the front towing eye and refit the cover.

Use extreme caution when detaching towing equipment. Vehicle movement is possible which can result in serious injury.

BEFORE STARTING OR DRIVING

If the vehicle is involved in a collision it should be checked by a Dealer/ Authorised Repairer, or suitably qualified persons, before starting or driving.

EVENT DATA RECORDING

Event data recorders are capable of collecting and storing data during a crash or near-crash event. The recorded information may assist in the investigation of such an event. The EDR may record information about vehicle dynamics and safety systems, potentially including such information as:

- How various systems in your vehicle were operating.
- Whether or not the driver and passenger seat belts were buckled.
- How far, if at all, the driver was pressing the accelerator and/or brake pedal.
- How fast the vehicle was travelling.

To access this information special equipment must be connected directly to the recording modules. Land Rover do not access EDR information without obtaining consent unless pursuant to a court order or where required by law enforcement, other government authorities or third parties acting with lawful authority.

Other parties may seek to access the information independently of Land Rover.

Note: *No personal data (e.g., name, gender, age and crash location) are recorded.*

SERVICE DATA RECORDING

Service data recorders in your vehicle are capable of collecting and storing diagnostic information about your vehicle. This potentially includes information about the performance or status of various systems and modules in the vehicle such as engine, throttle, steering or brakes.

In order to properly diagnose and service your vehicle, Land Rover and service and repair facilities may access vehicle diagnostic information through a direct connection to your vehicle.

Vehicle labels

LABEL LOCATIONS

Warning labels attached to your vehicle bearing this symbol mean: Do not touch or adjust components until you have read the relevant instructions in the handbook.

Labels showing this symbol indicate that the ignition system utilises very high voltages. Do not touch any ignition components while the starter switch is turned on.

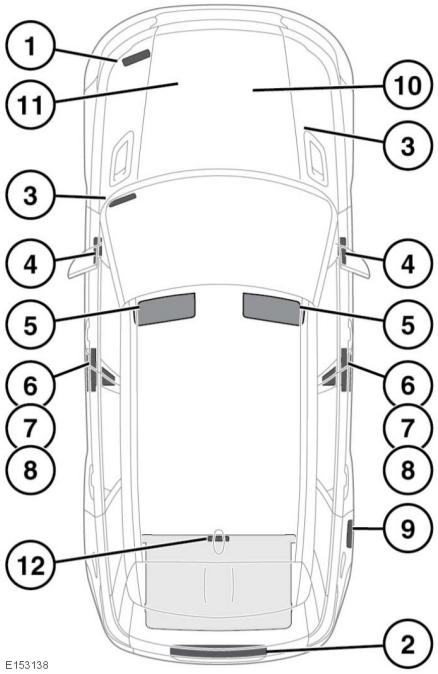

1. Bonnet locking platform - Air conditioning label.
2. Top of the battery - Battery warning symbols.
3. The Vehicle Identification Number (VIN) is stamped on a plate visible through the lowest part of the left side of the windscreen. The number is also stamped into the right side suspension tower.

   Note: *If you need to communicate with a Dealer/Authorised Repairer, you may be asked to quote the VIN number.*
   The vehicle's built date is shown on the VIN plate.

   Note: *This is the calendar month and year in which the body and power train assemblies were conjoined and the vehicle was driven from the production line. The vehicle's built date is shown on the tyre pressure label attached to the right side B pillar.*
4. End of the fascia (passenger side) - Passenger airbag label.
5. Sun visor - Airbag label, vehicle handling label.
6. Base of B pillar-VIN number.
7. Base of B pillar, or inside base of front door - Tyre pressure label, airbag warning label.
8. Mid-way up B pillar - Side airbag warning label.
9. Inside fuel-filler flap - Fuel label.
10. Engine number: V6 and V8 Petrol - The number is located on the front of the right side cam cover.
11. Engine number: V6 Diesel - The number is located on the front of the left side cam cover.
12. Underside of loadspace cover - loadspace cover warning label.

It is important that you are familiar with these subjects to make sure that your vehicle and its features are used safely.

ENGINE SPECIFICATIONS

	V6 Diesel	V6 Petrol S/C	V8 Petrol S/C
Capacity	2 993 cm^3	2 995 cm^3	4 999 cm^3
Firing order	1-4-2- 5-3-6	1-4-2- 5-3-6	1-5-4-2- 6-3-7-8
Bore	84.0 mm	84.5 mm	92.5 mm
Stroke	90.0 mm	89 mm	93.0 mm
Number of cylinders	6	6	8
Compression ratio	16:1	10.5:1	9.5:1

LUBRICANTS AND FLUIDS

Part	Variant	Specification
Engine oil	V6 Diesel vehicles with DPF	SAE 5W-30 engine oil meeting specification WSS-M2C934-B. If unavailable 5W-30 engine oils to ACEA C2 specification may be used.
	V6 Diesel vehicles without DPF	SAE 5W-30 engine oil meeting specification WSS-M2C913- C or B. If unavailable 5W-30 engine oils to ACEA A5/B5 specification may be used.
	V6 Petrol vehicles	SAE 5W-20 engine oil meeting specification WSS-M2C925. If unavailable or, where ambient temperatures fall to lower than -20° C, SAE 0W-20 engine oil meeting Jaguar Land Rover specification STJLR.51.5122 should be used.
	V8 Petrol vehicles	SAE 5W-20 engine oil meeting specification WSS-M2C925-A. If unavailable, SAE 0W-20 engine oil meeting Jaguar Land Rover specification STJLR.51.5122 may be used.
Transmission oil	All transmissions	Shell ATF L12108
Transfer gearbox oil	Without low range transmission	Castrol BOT 850
	With low range transmission	TL 7300 Shell TF 0753
Front differential oil	All vehicles	Castrol SAF-XO
Rear differential oil	Non-locking	Castrol SAF-XO
Rear differential oil	Electronic Locking	Castrol BOT 720
Dynamic response fluid	V6 Diesel and V8 Petrol S/C	Texaco Cold Climate PAS fluid 33270

Part	Variant	Specification
Brake fluid	All vehicles	Shell DOT4 ESL. If unavailable, a low viscosity, synthetic compatible DOT4 brake fluid that meets ISO 4925 class 6 and Jaguar Land Rover LRES22BF03 requirements may be used.
Screen washer	All vehicles	Screen wash with frost protection
Coolant	All vehicles	1:1 mixture of Havoline XLC antifreeze and water.

Jaguar Land Rover recommends Castrol oils.

CAPACITIES

Item	Variant	Capacity litres (pints)
Fuel tank (usable)	V6 Diesel	85 (18.7 gallons)
	V6 Petrol	105 (23 gallons)
	V8 Petrol	105 (23 gallons)
Engine oil refill and filter change	V6 Diesel	6.0 (10.5)
	V6 Petrol	8.0 (14.0)
	V8 Petrol	8.0 (14.0)
Automatic gearbox	All vehicles	Filled for life
Transfer box	Without low range transmission	0.75 (1.32)
	With low range transmission	1.5 (2.6)
Front differential - wet fill	All vehicles	0.51 (0.9)
Rear differential - wet fill	Non-locking	0.82 (1.4)
Rear differential - wet fill	Electronic locking	1.21 (2.1)
Washer reservoir (Standard)	All vehicles	6.0 (10.6)
Washer reservoir (Cold climates)	All vehicles	Main reservoir - 6.0 (10.6) Supplemental reservoir - 1.6 (2.8)
Cooling system (refill)	V6 Diesel	8.93 (15.7)
	V6 Petrol S/C	8.05 (14.2)
	V8 Petrol S/C	8.83 (15.5)
Cooling system with fuel burning heater (refill)	V6 Diesel	9.1 (16.0)
	V6 Petrol	8.22 (14.5)
	V8 Petrol S/C	9.0 (15.8)

The quoted capacities are approximate and provided as a guide only. All oil levels must be checked using the dipstick, level plugs, message centre information or drain and refill, as applicable.

WEIGHTS

Variant	Vehicle weight from kg (lb)	Gross Vehicle Weight (GVW)[1] kg (lb)	Gross Train Weight (GTW)[2] kg (lb)
V6 Diesel vehicles	2115 (4663)	3000 (6614)	6500 (14330)
V6 Petrol vehicles	2144 (4727)	2950 (6504)	6450 (14220)
V8 Petrol vehicles	2310 (5093)	3050 (6724)	6550 (14440)
1 The maximum permissible weight of the vehicle including passengers and load.			
2 The maximum permissible weight of the vehicle and braked trailer including their respective loads.			

Note: *For every 1000 metres (3280 ft) increase in altitude above sea level, GTW must be reduced by 10%.*

Variant	Maximum front axle load[1] kg (lb)	Maximum rear axle load[1] kg (lb)	Maximum roof crossbar load[2] kg (lb)
V6 Diesel vehicles	1500 (3307)	1775 (3913)	100 (220)
V6 Petrol vehicles	1500 (3307)	1730 (3814)	100 (220)
V8 Petrol vehicles	1500 (3307)	1730 (3814)	100 (220)
[1] The front and rear axle maximum loads can not be reached simultaneously as this will exceed the GVW limit.			
[2] This figure is extra to the weight of the roof rails and crossbars.			

DIMENSIONS

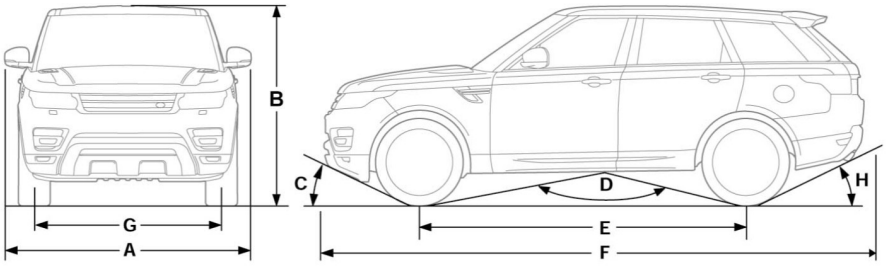

E150838

Item	Description	mm (inches)	Degrees
A	Width (including mirrors)	2220 (87.4)	-
B	Height (standard road height):	1780 (70)	-
C	Approach angle (at EEC kerb weight and standard road height)	-	25.8°
D	Ramp breakover angle (at EEC kerb weight and standard road height)	-	160.6°
E	Wheelbase	2923 (115)	-
F	Overall length	4850 (191)	-
G	Track - front	1690 (66.5)	-
	Track - rear	1685 (66.3)	-
H	Departure angle without tow hitch (at EEC kerb weight plus full size spare tyre and at standard road height)	-	26.4°
H	Departure angle with adjustable height tow hitch (at EEC kerb weight):	-	15.6°
H	Departure angle with electrically deployable tow hitch (stored):	-	23.2°
H	Departure angle with electrically deployable tow hitch (deployed):	-	17°
-	Wading depth at Off-road height	850 (33.46)	-
-	Minimum ground clearance at standard road height:	200 (7.87)	-
-	Turning circle (wall to wall)	12300 (484)	-

WHEEL AND TYRE SIZES

Light load tyre pressures Up to 4 passengers at 68 kg each plus 15 kg of luggage each (150 lb plus 33 lb)			
Wheel size	**Tyre size**	**Front pressures bar (psi, kPa)**	**Rear pressures bar (psi, kPa)**
6J x 20	T195/70 R20 M (temporary use spare	4.2 (60, 420)	4.2 (60, 420)
7.5J x 19	235/65 R19 109 V	2.3 (33, 230)	2.5 (36, 250)
8.5J x 20	255/55 R20 110 Y	2.3 (33, 230)	2.5 (36, 250)
9.5J x 21	275/45 R21 110 Y	2.3 (33, 230)	2.5 (36, 250)
9.5J x 22	275/40 R22 108 Y	2.3 (33, 230)	2.5 (36, 250)
Never exceed the total weight of passengers and luggage while using the light load setting			

Tyre pressures up to Gross Vehicle Weight(GVW)			
Wheel size	**Tyre size**	**Front pressures bar (psi, kPa)**	**Rear pressures bar (psi, kPa)**
7.5J x 19	235/65 R19 109 V	2.6 (38, 260)	3.1 (45, 310)
8.5J x 20	255/55 R20 110 Y	2.5 (36, 250)	3.0 (44, 300)
9.5J x 21	275/45 R21 110 Y	2.5 (36, 250)	3.0 (44, 300)
9.5J x 22	275/40 R22 108 Y	2.7 (39, 270)	3.2 (49, 320)

WARNING: If the tyres are deflated to the light load or inflated for the heavier load setting, then the TPMS will have to be adjusted to suit the vehicle load and tyre pressures. See 241, TYRE REPAIR KIT.

WHEEL ALIGNMENT DATA

	All models
Wheel alignment - front	0.15° ± 0.2°
Wheel alignment - rear	0.3° ± 0.2°
Camber - front left	-0.76° ± 0.75°
Camber - front right	-0.76° ± 0.75°
Camber - rear left	-1.5° ± 0.75°
Camber - rear right	-1.5° ± 0.75°
Castor - front left	3.92° ± 0.75°
Castor - front right	3.92° ± 0.75°

Note: *All figures are measured with the vehicle unoccupied, with full fluids, full tank of fuel and tyres inflated to normal pressures.*

BRAKE PEDAL TRAVEL

The brake pedal travel is set at the factory and is non-adjustable.

REMOTE KEY FOB TRANSMITTER LOCATIONS

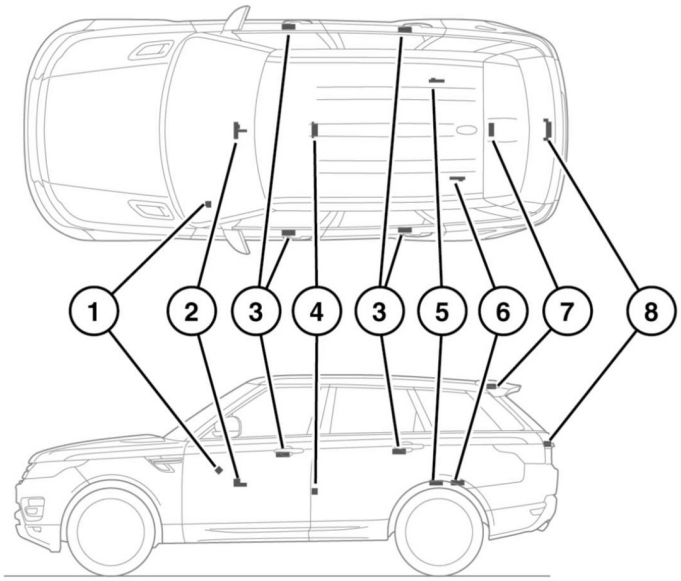

E151136

1. Security transmitter.
2. Cabin front transmitters.
3. Door transmitters.
4. Cabin middle transmitter.
5. Loadspace interior transmitter.
6. Loadspace interior transmitter.
7. Radio frequency transmitter.
8. Loadspace exterior transmitter.

Any person fitted with an implanted medical device should make sure the device is kept at a distance of at least 22 cm (8.7 inches) away from any transmitter mounted in the vehicle. This is to avoid any possibility of interference between the system and the device.

Technical specifications

Transmitter information

Service	Frequency Band	Max. Output	Antenna Position	Specific Conditions
4m VHF	70 - 85 MHz	30 W/ CW 40 W/ AM	Anywhere on the metallic part of the roof.	Transmitter, harness and antenna installation to the requirements of ISO/TS 21609.
2m VHF	142 - 175 MHz	30 W / CW 40 W / AM	Anywhere on the metallic part of the roof.	Transmitter, harness and antenna installation to the requirements of ISO/TS 21609.
TETRA	380 - 422 MHz	10 W / CW 10 W / PM	Anywhere on the metallic part of the roof.	Transmitter, harness and antenna installation to the requirements of ISO/TS 21609.
UHF	450 - 470 MHz	10 W / CW	Anywhere on the metallic part of the roof.	Transmitter, harness and antenna installation to the requirements of ISO/TS 21609.
Bluetooth	2400 - 2483.5 MHz	10 mW	Anywhere on the vehicle.	Transmitter, harness and antenna installation to the requirements of ISO/TS 21609.

Service	Frequency Band	Max. Output	Antenna Position	Specific Conditions
Road Telematics	5795 - 5815 MHz	2 W eirp	Anywhere close to a glazed area that does not contain antennas or conductive glass.	Transmitter, harness and antenna installation to the requirements of ISO/TS 21609.
Road Telematics	63 - 64 GHz	2 W eirp	Anywhere close to a glazed area that does not contain antennas or conductive glass.	Transmitter, harness and antenna installation to the requirements of ISO/TS 21609.

DECLARATIONS OF CONFORMITY

E134852

SIEMENS VDO
Automotive

SiemensVDO Automotive AG ,P.O. Box 10 09 43 ,D-93009 Regensburg

Name Dagmar Kolar
Department SV C TS RBG EMC-Laboratory
Tel. +49(0)941/790-6699
Fax +49(0)941/790-136699
E-Mail dagmar.kolar@siemens.com
Internet www.siemensvdo.de
Our Ref. Doc_5WK49096.doc
Date. 03/08/2005

Declaration of Conformity in accordance with Directive 1999/5/EC (R&TTE Directive)

Manufacturer: Siemens VDO Automotive AG
Body & Chassis Electronics

Address: Dep. SV C BC P2 RF TG
Siemenstrasse 12
D-93049 Regensburg
Germany

Product type designation: 5WK4 9096

Intended use: Radio frequency receiver used in vehicle locking/unlocking systems

The product mentioned above complies with the essential requirements and other relevant provisions of Directive 1999/5/EC, when used for its intended purpose:

Health and safety pursuant to §3.1.a: *Applied standard(s):* EN 60950:2000

Electromagnetic compatibility pursuant to § 3.1.b: *Applied standard(s):* EN 301 489-1,-3: V1.4.1 (2002-08)

Efficient use of spectrum pursuant to § 3.2: *Applied standard(s):* EN 300 220-1: V1.3.1 (2000-09)

The following marking applies to the above mentioned product:

CE

Siemens VDO Automotive AG

Regensburg, 2005-08-03

i.V. .....
Jean-Francois Tarabbia
Executive Vice President
Body and Chassis Electronics Operations

i.V. .....
Dr. Martin Fischer
Vice President
Wireless Products and Modules

SiemensVDO Automotive AG

Body & Chassis Electronics
Helmut Matschi
Klaus Müller

Postal Address:
SiemensVDO Automotive AG
P.O. Box 10 09 43
D-93009 Regensburg

Office Address:
Siemenstrasse 12
D-93055 Regensburg
Tel. +49(0)941/790-0

SIEMENS VDO
Automotive

SiemensVDO Automotive AG ,P.O. Box 10 09 43 ,D-93009 Regensburg

Name Dagmar Kolar
Department SV C TS RBG EMC Laboratory
Tel. +49(0)941/790-6699
Fax +49(0)941/790-1366999
E-Mail dagmar.kolar@siemens.com
Internet www.siemensvdo.de
Our Ref. Doc_S122780002.doc
Date. 09/11/2005

Declaration of Conformity in accordance with Directive 1999/5/EC (R&TTE Directive)

Manufacturer: Siemens VDO Automotive AG
Body & Chassis Electronics

Address: Siemensstrasse 12
D-93055 Regensburg
Germany

Product type designation: S122780002

Intended use: Radio frequency transmitter used Tire Pressure Monitoring system

The product mentioned above complies with the essential requirements and other relevant provisions of Directive 1999/5/EC, when used for its intended purpose:

Health and safety pursuant to §3.1.a: *Applied standard(s):* EN 60950: 2000

Electromagnetic compatibility pursuant to § 3.1.b: *Applied standard(s):* EN 301 489 -1,-3: V1.4.1 (2002-08)

Efficient use of spectrum pursuant to § 3.2: *Applied standard(s):* EN 300 220 -1: V1.3.1 (2000-09)

The following marking applies to the above mentioned product:

CE

Siemens VDO Automotive AG

Regensburg, 2005-11-09

i.V. .....
Jean-Francois Tarabbia
Executive Vice President
Body and Chassis Electronics Operations

i.V. .....
Dr. Martin Fischer
Vice President
Wireless Products and Modules

SiemensVDO Automotive AG

Body & Chassis Electronics
Helmut Matschi
Klaus Müller

Postal Address:
SiemensVDO Automotive AG
P.O. Box 10 09 43
D-93009 Regensburg

Office Address:
Siemensstraße 12
D-93055 Regensburg
Tel. +49(0)941/790-0

E134883

LEAR CORPORATION
ADVANCE RELENTLESSLY

Lear Corporation
Electronics Systems Division
21557 Telegraph Road
Southfield, MI 48033-4248
USA
Phone (248) 447-1500

Date: February 6, 2009

INFORMATION TO BE INCLUDED IN THE END USER'S MANUAL

The following information must be included in the end product user's manual to ensure continued FCC and Industry Canada regulatory compliance. The ID numbers must be included in the manual if the device label is not readily accessible to the end user. The compliance paragraphs below must be included in the user's manual.

The following user's manual statements are provided by Lear Corporation to Jaguar Land Rover electronically after certification.

Key fobs

Land Rover, Range Rover,
****

FCC ID: KOBJTF10A (Range Rover, Land Rover)
FCC ID: KOBJTF10B (Jaguar)
IC: 3521A-JTF10A (Range Rover, Land Rover)
IC: 3521A-JTF10B (Jaguar)
Model #: AH42-15K601A (Range Rover)
Model #: AH22-15K601A (Land Rover)
Model #: AW93-15K601A (Jaguar)

This device complies with Part 15 of the FCC Rules and with RSS-210 of Industry Canada.
Operation is subject to the following two conditions:
(1) This device may not cause harmful interference, and
(2) This device must accept any interference received, including interference that may cause undesired operation.
WARNING: Changes or modifications not expressively approved by the party responsible for compliance could void the user's authority to operate the equipment.
The term "IC:" before the radio certification number only signifies that Industry Canada technical specifications were met.
****

LEAR CORPORATION
ADVANCE RELENTLESSLY

Lear Corporation
Electronics Systems Division
21557 Telegraph Road
Southfield, MI 48033-4248
USA
Phone (248) 447-1500

RKE Receiver

Land Rover, Range Rover, Jaguar
****

FCC ID: KOBJLR09A
IC: 3521-JLR09A
Model #: AH42-15K602-A

This device complies with Part 15 of the FCC Rules and with RSS-210 of Industry Canada.
Operation is subject to the following two conditions:
(1) This device may not cause harmful interference, and
(2) This device must accept any interference received, including interference that may cause undesired operation.
WARNING: Changes or modifications not expressively approved by the party responsible for compliance could void the user's authority to operate the equipment.
The term "IC:" before the radio certification number only signifies that Industry Canada technical specifications were met.
****

Passive Entry / Passive Start Module

Land Rover, Range Rover, Jaguar
****

FCC ID: KOBJBG10A
IC: 3521-JBG10A
Model #: AH22-19H440 (PEPS)
Model #: AH42-19H440 (Passive Start ONLY)

FCC ID: KOBJBG10B
IC: 3521-JBG10B
Model #: AH22-19H440 (PEPS)
Model #: AH42-19H440 (Passive Start ONLY)

This device complies with Part 15 of the FCC Rules and with RSS-210 of Industry Canada.
Operation is subject to the following two conditions:
(1) This device may not cause harmful interference, and
(2) This device must accept any interference received, including interference that may cause undesired operation.
WARNING: Changes or modifications not expressively approved by the party responsible for compliance could void the user's authority to operate the equipment.
The term "IC:" before the radio certification number only signifies that Industry Canada technical specifications were met.

EC Declaration of Conformity

EC Directive:	**1999/5/EC**
Manufacturer:	**Lear Corporation**
Type Designation / FCC ID:	**KOBJBG10A**
Model Numbers:	**5E0770237, 5E0770337, 19H440, AH22-19H440-AC, AH42-19H440-AD, AH22-19H440, AH42-19H440**
Description / Intended Use:	**Remote Function Actuator (RFA), passive keyless entry and start system low frequency initiator**
Trademarks:	**Land Rover / Range Rover / Jaguar**
Applied Standards:	**European Commission Directive 2006/28/EC ETSI EN 60950 ETSI EN 300 330 CEPT/ERC/REC 70-03 AS/NZS 4268 FCC Regulations 47 CFR Part 15**
Responsible Person:	**Kevin Cotton Lear Corporation 21557 Telegraph Road Southfield, Michigan 48033 United States of America**

Hereby, **Lear Corporation** declares that the product referenced above is in compliance with the essential requirements of **Directive 1999/5/EC**, on the approximation of the laws of the member states relating to **Directive 1999/5/EC**

Signed. Kevin Cotton
Kevin Cotton, Lear Corporation

Date. **27 March 2009**

EC Declaration of Conformity

EC Directive:	**1999/5/EC**
Manufacturer:	**Lear Corporation**
Type Designation / FCC ID:	**KOBJBG10B**
Model Numbers:	**5E0770257, 5E0770357, 19H440, AH22-19H440, AH42-19H440, AH22-19H440-AD, AH42-19H440-AE**
Description / Intended Use:	**Remote Function Actuator (RFA), passive keyless entry and start system low frequency initiator**
Trademarks:	**Land Rover / Range Rover / Jaguar**
Applied Standards:	**European Commission Directive 2006/28/EC ETSI EN 60950 ETSI EN 300 330 CEPT/ERC/REC 70-03 AS/NZS 4268 FCC Regulations 47 CFR Part 15**
Responsible Person:	**Kevin Cotton Lear Corporation 21557 Telegraph Road Southfield, Michigan 48033 United States of America**

Hereby, **Lear Corporation** declares that the product referenced above is in compliance with the essential requirements of **Directive 1999/5/EC**, on the approximation of the laws of the member states relating to **Directive 1999/5/EC**

Signed. Kevin Cotton
Kevin Cotton, Lear Corporation

Date. **27 March 2009**

E134894

EC Declaration of Conformity

EC Directive:	**1999/5/EC**
Manufacturer:	**Lear Corporation**
Type Designation:	**15K601**
Model Numbers:	**5E0B50127, 5E0B60127, 15K601-BB, AH42-15K601B, AH22-15K601B, AH42-15K601-BC, AH22-15K601-BC**
Description / Intended Use:	**Passive Key (PK) / Customer Identification Device (CID), passive keyless entry system keyfob**
Trademarks:	**Land Rover / Range Rover**
Applied Standards:	**CEPT/ERC/REC 70-03 ETSI EN 60950 ETSI EN 300 220 ETSI EN 301 489 IEC EN 60950 AS/NZS 4268**
Responsible Person:	**Kevin Cotton Lear Corporation 21557 Telegraph Road Southfield, Michigan 48033 United States of America**

Hereby, **Lear Corporation** declares that the product referenced above is in compliance with the essential requirements of **Directive 1999/5/EC**, on the approximation of the laws of the member states relating to **Directive 1999/5/EC**.

Signed: Kevin Cotton
Kevin Cotton, Lear Corporation

Date: **26 March 2009**

EC Declaration of Conformity

EC Directive:	**1999/5/EC**
Manufacturer:	**Lear Corporation**
Type Designation:	**5E0760127**
Model Numbers:	**5E0760127, 15K602, AH42-15K602-B, AH42-15K602-BC**
Description / Intended Use:	**RF Receiver (RFR), used in passive entry and passive start, remote keyless entry, and tire pressure monitoring systems**
Trademarks:	**Land Rover / Range Rover / Jaguar**
Applied Standards:	**European Commission Directive 2006/28/EC ETSI EN 60950 ETSI EN 300 220 CEPT/ERC/REC 70-03 AS/NZS 4268**
Responsible Person:	**Kevin Cotton Lear Corporation 21557 Telegraph Road Southfield, Michigan 48033 United States of America**

Hereby, **Lear Corporation** declares that the product referenced above is in compliance with the essential requirements of **Directive 1999/5/EC**, on the approximation of the laws of the member states relating to **Directive 1999/5/EC**.

Signed: Kevin Cotton
Kevin Cotton, Lear Corporation

Date: **27 March 2009**

E134885

QuieTek

快特電波股份有限公司

低功率射頻電機型式認證證明

一、申 請 者： Lear Corporation
二、製造廠商： Lear Corporation
三、器材名稱： RFA (Passive Start)
四、廠牌/型號： LEAR / 5E0770337
五、發射功率（電場強度）：125KHz ; 61.5dBuV/m(Average)
六、工作頻率： 125KHz

七、發證日期： 98 年 06 月 02 日
八、審驗合格標籤式樣： CCAH09LP0570T1

說明：
1. 請依上列標籤式樣自製標籤，標貼在印錄於器材本體明顯處，始得販賣或公開陳列。
2. 經型式認證合格之低功率射頻電機，其型號、設計、射頻性能如有變更，應重新申請型式認證。
3. 違反低功率電波輻射性電機管理辦法之規定，擅自使用或變更無線電頻率、電功率或依電信法規定裁罰外，無線機關(構)並得撤銷或型式認證核准。
4. 這審驗證書保留這審核品所日後抽對。
5. 本型式認證證明及其合格標籤使用權專屬取得本證明者，本證明持有人絕無同意轉讓當這取得標籤員會備查後，得授權他人於同廠牌同型號之器材，使用其合格標籤。

備註：
1、本器材符合低功率射頻電機技術規範 LP0002 2.5節之規定。
2、本無線機係經國家通訊傳播委員會委託，檢驗本型式認證證明。
3、本器材使用固定天線廠牌/型號如下：
Lear Corporation / N/A

E134886

QuieTek

快特電波股份有限公司

低功率射頻電機型式認證證明

一、申 請 者： Lear Corporation
二、製造廠商： Lear Corporation
三、器材名稱： Range Rover FOB
四、廠牌/型號： Range Rover / 5E0B60227
五、發射功率（電場強度）：315MHz ; 84.195dBuV/m(Peak)
六、工作頻率： 315MHz

七、發證日期： 98 年 06 月 02 日
八、審驗合格標籤式樣： CCAH09LP0550T5

說明：
1. 請依上列標籤式樣自製標籤，標貼在印錄於器材本體明顯處，始得販賣或公開陳列。
2. 經型式認證合格之低功率射頻電機，其型號、設計、射頻性能如有變更，應重新申請型式認證。
3. 違反低功率電波輻射性電機管理辦法之規定，擅自使用或變更無線電頻率、電功率或依電信法規定裁罰外，無線機關(構)並得撤銷或型式認證核准。
4. 這審驗證書保留這審核品所日後抽對。
5. 本型式認證證明及其合格標籤使用權專屬取得本證明者，本證明持有人絕無同意轉讓當這取得標籤員會備查後，得授權他人於同廠牌同型號之器材，使用其合格標籤。

備註：
1、本器材符合低功率射頻電機技術規範 LP0002 3.4.2節之規定。
2、本無線機係經國家通訊傳播委員會委託，檢驗本型式認證證明。
3、本器材使用固定天線廠牌/型號如下：
Lear Corporation / N/A

E134887

QuieTek

快特電波股份有限公司

低功率射頻電機型式認證證明

一、申 請 者： Lear Corporation
二、製造廠商： Lear Corporation
三、器材名稱： Range Rover FOB
四、廠牌/型號： Range Rover / 5E0B50227
五、發射功率（電場強度）：315MHz ; 84.195dBuV/m(Peak)
六、工作頻率： 315MHz

七、發證日期： 98 年 06 月 02 日
八、審驗合格標籤式樣：

CCAH09LP0551T7

說明：

1. 請依上列標籤式樣自製標籤，標貼或印鑄於器材本體明顯處，始得販賣或公開陳列。
2. 經型式認證合格之低功率射頻電機，其型號、設計、射頻性能如有變更，應重新申請型式認證。
3. 違反低功率電波輻射性電機管理辦法之規定，擅自使用或變更無線電頻率、電功率者，除依電信法規定處罰外，驗證機關(構)並得廢止其型式認證證明或型式認證標籤。
4. 送審廠商應保留送審樣品供日後核對。
5. 本型式認證證明及其合格標籤使用權專屬取得本證明者。本證明持有人檢附同意書報請國家通訊傳播委員會備查後，得授權他人於同廠牌同型號之器材，使用其合格標籤。

備註：

1、本器材符合低功率射頻電機技術規範 LP0002 3.4.2節之規定。
2、本驗證機構係經國家通訊傳播委員會委託，核發本型式認證證明。
3、本器材所使用固定式天線廠牌/型號如下：
Lear Corporation / N/A

QuieTek

快特電波股份有限公司

低功率射頻電機型式認證證明

一、申 請 者： Lear Corporation
二、製造廠商： Lear Corporation
三、器材名稱： RFA (Passive Start & Start Module)
四、廠牌/型號： LEAR / 5E0770237
五、發射功率（電場強度）：125KHz ; 63.3dBuV/m(Average)
六、工作頻率： 125KHz

七、發證日期： 98 年 06 月 02 日
八、審驗合格標籤式樣：

CCAH09LP0560T8

說明：

1. 請依上列標籤式樣自製標籤，標貼或印鑄於器材本體明顯處，始得販賣或公開陳列。
2. 經型式認證合格之低功率射頻電機，其型號、設計、射頻性能如有變更，應重新申請型式認證。
3. 違反低功率電波輻射性電機管理辦法之規定，擅自使用或變更無線電頻率、電功率者，除依電信法規定處罰外，驗證機關(構)並得廢止其型式認證證明或型式認證標籤。
4. 送審廠商應保留送審樣品供日後核對。
5. 本型式認證證明及其合格標籤使用權專屬取得本證明者。本證明持有人檢附同意書報請國家通訊傳播委員會備查後，得授權他人於同廠牌同型號之器材，使用其合格標籤。

備註：

1、本器材符合低功率射頻電機技術規範 LP0002 2.8節之規定。
2、本驗證機構係經國家通訊傳播委員會委託，核發本型式認證證明。
3、本器材所使用固定式天線廠牌/型號如下：
Lear Corporation / N/A

E134868

QuieTek

快特電波股份有限公司

低功率射頻電機型式認證證明

一、申 請 者： Lear Corporation
二、製造廠商： Lear Corporation
三、器材名稱： Jaguar fob
四、廠牌/型號： JAGUAR / 5E0B4P217
五、發射功率（電場強度）：315MHz ; 83.225dBuV/m(Peak)
六、工作頻率： 315MHz

七、審驗日期： 98 年 07 月 01 日
八、審驗合格標籤式樣：

CCAH09LP0830T1

說明：

1. 請依上列標籤式樣自製標籤，標貼或印鑄於器材本體明顯處，始得販賣或公開陳列。
2. 經型式認證合格之低功率射頻電機，其型號、設計、射頻性能如有變更，應重新申請型式認證。
3. 違反低功率電波輻射性電機管理辦法之規定，擅自使用或變更無線電頻率、電功率者，除依電信法規定處罰外，驗證機關(構)並得廢止其型式認證證明或型式認證標籤。
4. 送審廠商應保留送審樣品供日後核對。
5. 本型式認證證明及其合格標籤使用權專屬取得本證明者。依電信管制射頻器材審驗辦法第15條規定，持有人得經由網際網路申請同意他人於同廠牌同型號之電信管制射頻器材使用型式認證標籤，並於次日起 30 天內，應檢具「電信管制射頻器材審驗合格標籤或符合性聲明標籤同意使用備查表」送本會備查。

備註：

1、本器材符合低功率射頻電機技術規範(LP0002 3.4.2節)之規定。
2、驗證機構係經國家通訊傳播委員會委託，核發本型式認證證明。
3、本器材使用固定式天線，廠牌/型號為:Lear Corporation / N/A。

Continental

Continental Automotive GmbH – Postfach 100 953 – 93009 Regensburg

Kolar Dagmar
AQL RBG 42
Phone +49 (941) 790-6699
Fax +49 (941) 790-136699
dagmar.kolar@continental-corporation.com

Date	Your message dated	Our Reference	Your reference
July 29, 2008			

Declaration of Conformity in accordance with Directive 1999/5/EC (R&TTE Directive)

Manufacturer:	Continental Automotive GmbH
Address:	Siemensstrasse 12 D-93055 Regensburg Germany
Product type designation:	S180 052 020 A
Intended use:	Tire Pressure System

The product mentioned above complies with the essential requirements and other relevant provisions of Directive 1999/5/EC, when used for its intended purpose:

Health and safety pursuant to §3.1.a:	*Applied standard(s):* EN 60950-1: 2006
Electromagnetic compatibility pursuant to § 3.1.b:	*Applied standard(s):* EN 301 489 -1: V1.6.1 (2005-09) EN 301 489 -3: V1.4.1 (2002-08)
Efficient use of spectrum pursuant to § 3.2:	*Applied standard(s):* EN 300 220 -1: V2.1.1 (2006-04) EN 300 220 -2: V2.1.1 (2006-04)

The following marking applies to the above mentioned product:

CE

Continental Automotive GmbH

Regensburg, 2008-07-29

Andreas Wolf
Executive Vice President
Body &Security

i.V. Norbert Müller
Director Product Group 3
Body & Security

전자문서확인번호 WHSW-31GL-V7SG-VXVD

방송통신기기인증서
Certificate of Broadcasting and Communication Equipment

인증의 종류 *Certification Type*	형식등록(Type Registration)
상호 또는 성명 *Trade Name or Applicant*	LEAR CORPORATION
기기의 명칭 *Equipment Name*	특정소출력무선기기(데이터전송용 무선기기)
기본모델명 *Basic Model Number*	5E0B40
파생모델명 *Series Model Number*	
인증번호 *Certification No*	LER-5E0B40
제조자/제조국가 *Manufacturer/Country of Origin*	Lear Automotive Electronics and Electrical/중국
형식기호 *Type Identification*	LARN2-I03L433.92T,0.125R0.003F1D1
인증연월일 *Date of Certification*	2009년(Year) 07월(Month) 15일(Date)
기타 *Others*	

위 기기는 「전기통신기본법」, 「전파법」에 따라 인증되었음을 증명합니다.
It is certified that foregoing equipment has been certificated under the Framework Act on Telecommunications and Radio Waves Act.

2009년(Year) 07월(Month) 15일(Date)

전파연구소장

Director General of Radio Research Laboratory

Korea Communications Commission Republic of Korea

전자문서확인번호 NC49-Y219-MT4V-UKBD

방송통신기기인증서
Certificate of Broadcasting and Communication Equipment

인증의 종류 *Certification Type*	형식등록(Type Registration)
상호 또는 성명 *Trade Name or Applicant*	LEAR CORPORATION
기기의 명칭 *Equipment Name*	데이터전송용 무선기기
기본모델명 *Basic Model Number*	5E0B5P127
파생모델명 *Series Model Number*	5E0B50,5E0B60
인증번호 *Certification No*	LER-5E0B5P127
제조자/제조국가 *Manufacturer/Country of Origin*	Lear Automotive Electronics and Electrical/중국
형식기호 *Type Identification*	LARN2-I03L433.92T,0.125R0.003F1D1
인증연월일 *Date of Certification*	2009년(Year) 05월(Month) 22일(Date)
기타 *Others*	

위 기기는 「전기통신기본법」, 「전파법」에 따라 인증되었음을 증명합니다.
It is certified that foregoing equipment has been certificated under the Framework Act on Telecommunications and Radio Waves Act.

2009년(Year) 05월(Month) 28일(Date)

전파연구소장

Director General of Radio Research Laboratory

Korea Communications Commission Republic of Korea

E134889

전자문서확인번호 7N7R-CFNJ-RMWI-SU1X

방송통신기기인증서
Certificate of Broadcasting and Communication Equipment

인증의 종류 *Certification Type*	형식등록(Type Registration)
상호 또는 성명 *Trade Name or Applicant*	LEAR CORPORATION
기기의 명칭 *Equipment Name*	미약 전계강도 무선기기
기본모델명 *Basic Model Number*	5E0770237
파생모델명 *Series Model Number*	
인증번호 *Certification No*	LER-5E0770237
제조자/제조국가 *Manufacturer/Country of Origin*	Lear Valls Automotive Electronics and Electrical/스페인
형식기호 *Type Identification*	LPD-103L0.125TA1D
인증연월일 *Date of Certification*	2009년(Year) 09월(Month) 04일(Date)
기타 *Others*	

위 기기는 「전기통신기본법」, 「전파법」에 따라 인증되었음을 증명합니다.
It is certified that foregoing equipment has been certificated under the Framework Act on Telecommunications and Radio Waves Act.

2009년(Year) 09월(Month) 04일(Date)

전파연구소장

Director General of Radio Research Laboratory

Korea Communications Commission Republic of Korea

전자문서확인번호 JVC5-A5YQ-BF4C-1DBT

방송통신기기인증서
Certificate of Broadcasting and Communication Equipment

인증의 종류 *Certification Type*	형식등록(Type Registration)
상호 또는 성명 *Trade Name or Applicant*	LEAR CORPORATION
기기의 명칭 *Equipment Name*	미약 전계강도 무선기기
기본모델명 *Basic Model Number*	5E0770237
파생모델명 *Series Model Number*	5E0770337
인증번호 *Certification No*	LER-5E0770237
제조자/제조국가 *Manufacturer/Country of Origin*	Lear Valls Automotive Electronics and Electrical/스페인
형식기호 *Type Identification*	LPD-103L0.125TA1D
인증연월일 *Date of Certification*	2009년(Year) 09월(Month) 04일(Date)
기타 *Others*	

위 기기는 「전기통신기본법」, 「전파법」에 따라 인증되었음을 증명합니다.
It is certified that foregoing equipment has been certificated under the Framework Act on Telecommunications and Radio Waves Act.

2009년(Year) 09월(Month) 18일(Date)

전파연구소장

Director General of Radio Research Laboratory

Korea Communications Commission Republic of Korea

E134890

E134891

Independent Communications Authority of South Africa
Pinmill Farm, 164 Katherine Street, Sandton
Private Bag X10002, Sandton, 2146

Radio Equipment Type Approval Certificate

Radio Equipment Type Approval Number

TA-2009/302

The Authority, in the exercise of the powers conferred upon it by section 35 (1) of the Electronic Communications Act, 2005 (Act 36 of 2005), the applicable radio regulations which currently remain in force in terms of section 95 (2) of the Electronic Communications Act and subject to the terms and conditions set out in this document (see overleaf), hereby issues a radio equipment type approval certificate to the company whose name and particulars are listed below.

Company Particulars

Name	:	**Jaguar Land Rover SA**
Street Address	:	**Simon Vermooten Road, Silverton**
Telephone Number	:	**012 842 3274**
Facsimile Number	:	**012 845 1005**
Registration Number	:	**2001/027269/07**

Description of Apparatus

Category	:	**Remote Function Actuator (RFA)**
Model	:	**KOBJBG10B**
Frequency Range	:	**119 – 135 kHz**
ITU Emission Code	:	**12KG1D**
Modulation	:	**BPSK**
Power Output	:	**+37.7 DbµA/m @ 3m**
Channel Spacing	:	**-**
Features	:	**-**

Only the original or a certified copy of the radio equipment type approval certificate shall be considered valid.

Philemon Molefe
Senior Manager: Engineering & Technology

0 9 JUN 2009

P Mashilo (**Chairperson**), NA Buhyi, TLV Makhakhe, R Nkuna, BB Ntombela, FK Sibande, Dr MM Soulikwa, Prof JCW van Rooyen SC, MM Zokwe (**Councillors**), **BK Motlana (CEO)**

Independent Communications Authority of South Africa
Pinmill Farm, 164 Katherine Street, Sandton
Private Bag X10002, Sandton, 2146

Radio Equipment Type Approval Certificate

Radio Equipment Type Approval Number

TA-2009/303

The Authority, in the exercise of the powers conferred upon it by section 35 (1) of the Electronic Communications Act, 2005 (Act 36 of 2005), the applicable radio regulations which currently remain in force in terms of section 95 (2) of the Electronic Communications Act and subject to the terms and conditions set out in this document (see overleaf), hereby issues a radio equipment type approval certificate to the company whose name and particulars are listed below.

Company Particulars

Name	:	**Jaguar Land Rover SA**
Street Address	:	**Simon Vermooten Road, Silverton**
Telephone Number	:	**012 842 3274**
Facsimile Number	:	**012 845 1005**
Registration Number	:	**2001/027269/07**

Description of Apparatus

Category	:	**Remote Function Actuator (RFA)**
Model	:	**KOBJBG10A**
Frequency Range	:	**119 – 135 kHz**
ITU Emission Code	:	**12KG1D**
Modulation	:	**BPSK**
Power Output	:	**+40.7 DbµA/m @ 3m**
Channel Spacing	:	**-**
Features	:	**-**

Only the original or a certified copy of the radio equipment type approval certificate shall be considered valid.

Philemon Molefe
Senior Manager: Engineering & Technology

0 9 JUN 2009

P Mashilo (**Chairperson**), NA Buhyi, TLV Makhakhe, R Nkuna, BB Ntombela, FK Sibande, Dr MM Soulikwa, Prof JCW van Rooyen SC, MM Zokwe (**Councillors**), **BK Motlana (CEO)**

ICASA

Independent Communications Authority of South Africa
Pinmill Farm, 164 Katherine Street, Sandton
Private Bag X10002, Sandton, 2146

Radio Equipment Type Approval Certificate

Radio Equipment Type Approval Number

TA-2009/304

The Authority, in the exercise of the powers conferred upon it by section 35 (1) of the Electronic Communications Act, 2005 (Act 36 of 2005), the applicable radio regulations which currently remain in force in terms of section 95 (2) of the Electronic Communications Act and subject to the terms and conditions set out in this document (see overleaf), hereby issues a radio equipment type approval certificate to the company whose name and particulars are listed below.

Company Particulars

Name	:	**Jaguar Land Rover SA**
Street Address	:	**Simon Vermooten Road, Silverton**
Telephone Number	:	**012 842 3274**
Facsimile Number	:	**012 845 1005**
Registration Number	:	**2001/027269/07**

Description of Apparatus

Category	:	**Low Frequency Initiator FET Receiver**
Model	:	**5E0760127**
Frequency Range	:	**433.05 – 434.79 MHz**
ITU Emission Code	:	**739KK1D**
Modulation	:	**ASK, FSK**
Power Output	:	**-**
Channel Spacing	:	**-**
Features	:	**-**

Only the original or a certified copy of the radio equipment type approval certificate shall be considered valid.

Philemon Molefe
Senior Manager: Engineering & Technology

0 9 JUN 2009

P Mashile (**Chairperson**), NA Batyi, TLV Makhakhe, R Nkuna, BB Ntombela, FK Sibande, Dr MM Sozikwa.

ICASA

Independent Communications Authority of South Africa
Pinmill Farm, 164 Katherine Street, Sandton
Private Bag X10002, Sandton, 2146

Radio Equipment Type Approval Certificate

Radio Equipment Type Approval Number

TA-2009/305

The Authority, in the exercise of the powers conferred upon it by section 35 (1) of the Electronic Communications Act, 2005 (Act 36 of 2005), the applicable radio regulations which currently remain in force in terms of section 95 (2) of the Electronic Communications Act and subject to the terms and conditions set out in this document (see overleaf), hereby issues a radio equipment type approval certificate to the company whose name and particulars are listed below.

Company Particulars

Name	:	**Jaguar Land Rover SA**
Street Address	:	**Simon Vermooten Road, Silverton**
Telephone Number	:	**012 842 3274**
Facsimile Number	:	**012 845 1005**
Registration Number	:	**2001/027269/07**

Description of Apparatus

Category	:	**Key Fob Transmitter**
Model	:	**15K601**
Frequency Range	:	**433.05 MHz**
ITU Emission Code	:	**739KK1D**
Modulation	:	**ASK, FSK**
Power Output	:	**-14.6 dBm**
Channel Spacing	:	**-**
Features	:	**-**

Only the original or a certified copy of the radio equipment type approval certificate shall be considered valid.

Philemon Molefe
Senior Manager: Engineering & Technology

0 9 JUN 2009

P Mashile (**Chairperson**), NA Batyi, TLV Makhakhe, R Nkuna, BB Ntombela, FK Sibande, Dr MM Sozikwa, Prof JCW van Rooyen SC, MM Zokwe (**Councillors**), **BK Motlana (CEO)**

E134892

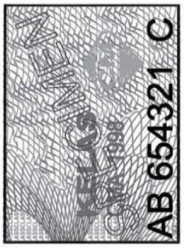

Label to be used on the following products only:

- *citizen band radio equipment*
- *cellular equipment*
- *trunk radio equipment*
- *spread spectrum devices*
- *leased channel radio equipment*
- *cordless telephone*
- *wireless security devices*
- *wireless microphone*
- *radio-control equipment*
- *medical & biology telemetry equipment*

E134893

ALPINE

ALPINE ELECTRONICS, INC.
20-1 Yoshima-Kogyodanchi Iwaki-City, Fukushima 970-1192 Japan
Phone: (+81) 246-36-4111 Fax: (+81) 246-36-6060

DECLARATION of CONFORMITY
For

CE

Product: Bluetooth Module
Model: IAM2.1 BT PWB EU3

Supplied by
ALPINE Electronics, Inc.
20-1, Yoshima-Kogyodanchi, Iwaki-shi
Fukushima 970-1192 Japan

Technical Construction File held by
ALPINE Electronics, Inc.
20-1, Yoshima-Kogyodanchi, Iwaki-shi
Fukushima 970-1192 Japan

Notified Body - R&TTE Directive N/A

	Standard used for comply
R&TTE Directive (Article 3.1(a) Safety)	EN60065:2002+Amd.1:2006+Amd.2:2010
R&TTE Directive (Article 3.1(b) EMC)	EN301-489-1 V1.8.1:2008-04 EN301-489-17 V2.1.1:2009-05
R&TTE Directive (Article 3.2 Spectrum)	EN300 328 V1.7.1:2006-10

Means of Conformity

We declare under our sole responsibility that the Product (s) is conformity with the essential requirements and other relevant requirements of the Radio and Telecommunication Terminal Equipment (R&TTE) Directive (1999/5/EC).

Date of issue: 08 July 2011

Signature of Responsible Person:

Isamu Takaku
Global Engineering Strategy Office

E143645

Index

A

B

C

D

E

F

G

H

I

Index

J

K

L

M

N

O

P

Q

R

Index

S

Index

T

Index

U

V

W

X

Controls overview

DRIVER CONTROLS

1. Front interior lamps (**56**).
2. Panoramic roof (**70**).
3. Roof blind (**70**).
4. Lighting/direction indicator/trip computer (**53**/**47**).
5. Message centre control (**46**).
6. Instrument panel, warning lamps and message centre (**45**/**49**).
7. Cruise control/adaptive cruise control (**125**/**126**).
8. Wiper/washer controls (**58**).
9. Engine START/STOP (**97**).
10. Touch screen (**72**).
11. Front climate control (**75**).
12. Climate control menu (**75**).
13. Hazard warning lamps.
14. Front heated/climate seat menu (**76**).
15. Glovebox release (**82**).
16. CD eject (**141**).
17. Climate control (**75**).
18. Gear selector (**102**).
19. Terrain response (**133**).
20. Low range transmission (**104**).
21. Automatic speed limiter (ASL) (**124**).
22. Intelligent stop/start (**100**).
23. Electric parking brake (**112**).
24. Air suspension control (**108**).
25. Dynamic stability control (DSC) off (**106**).
26. Hill descent control (HDC) (**135**).
27. Audio on/off and volume (**141**).
28. Paddle shift up (**102**).
29. Heated steering wheel (**27**).
30. Steering column adjuster (**27**).
31. Horn.
32. Telephone and voice recognition (**174**/**168**).
33. Paddle shift down (**102**).
34. Interior illumination control.
35. Tailgate release (manual), open/close (powered) (**9**/**9**).
36. Bonnet release lever (**202**).
37. Central locking switches (**15**).
38. Driving position memory (**19**).
39. Window controls (**70**).
40. Rear windows isolation and child door locks (**33**).
41. Mirror adjuster/power fold mirror (**61**).